3” WATER & DIESEL TRANSFER PUMP - PARTS LIST

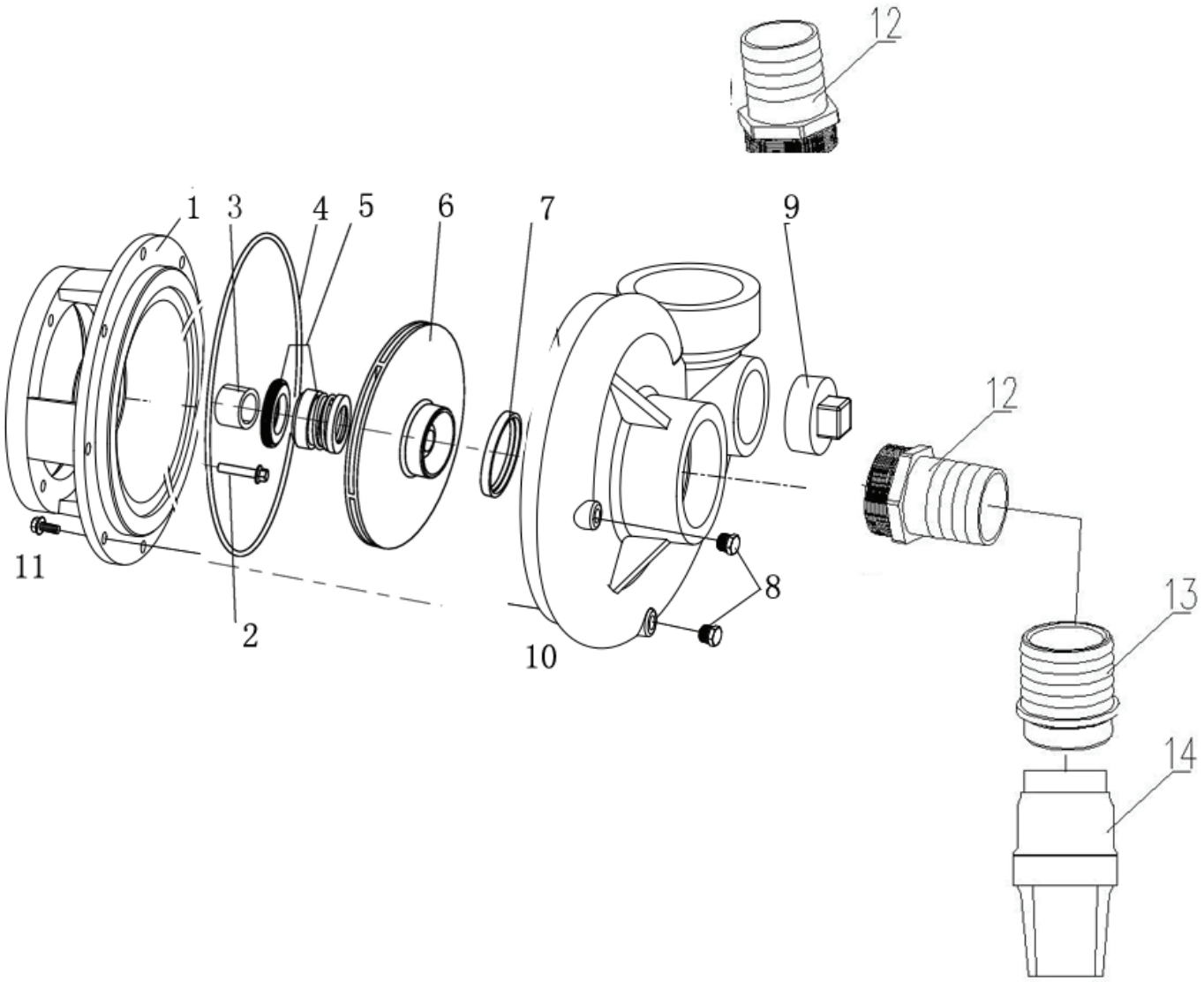

SKU: 124 TT80B SERIES

NO	NAME	PART NUMBER	MATERIAL	QTY
1	Pump Cover		HT200	1
2	Bolt		Q235	1
3	Shaft Case		HPb59-1	1
4	O ring 196*4		Viton Rubbers	1
5	Mechanical Seal	125 85.572.752	Viton Rubbers	1
6	Impeller		HT200	1
7	Impeller Washer		Viton Rubbers	1

NO	NAME	PART NUMBER	MATERIAL	QTY
8	Copper Plug		HPb59-1	3
9	Cast Iron Plug		HT200	2
10	Pump Body		HT200	1
11	Bolt			12
12	Pipe		Cast Iron	2
13	Pipe		Plastic	1
14	Strainer			1

Replacement Pump Kit Part # 125 85.572.207