3” Trash Pump

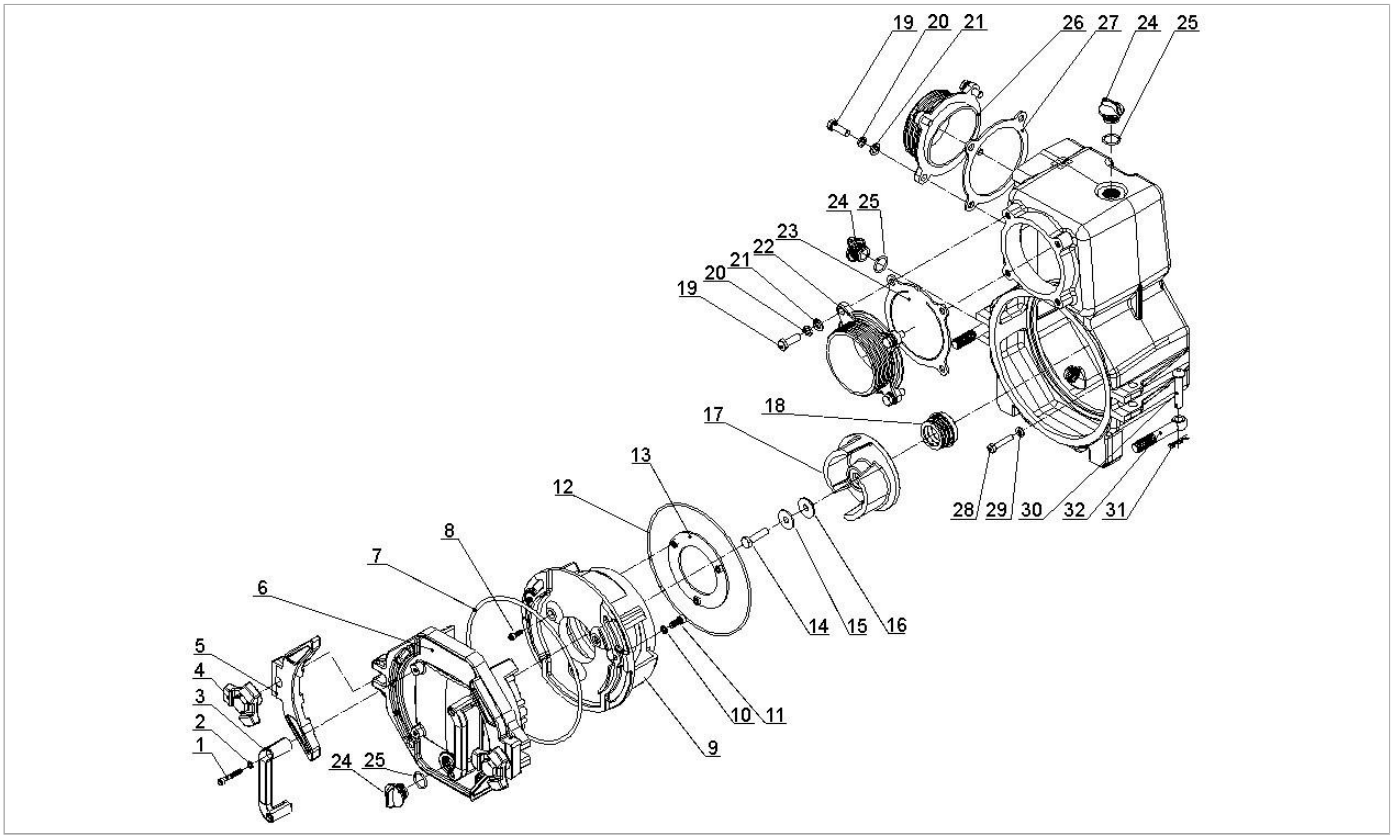

NO.	Description	Part number	QTY
1	Bolt		4
2	Washer		4
3	Handle	85.572.312	2
4	Clamp nut	85.572.317	2
5	Cover clamp	85.572.314	2
6	Pump cover	85.572.693	1
7*#	Body O-ring	85.572.604	1
8	Bolt		3
9	Volute	85.572.320	1
10	Spring washer		2
11	Bolt		2
12*#	Volute O-ring	85.572.456	1
13	Wear plate	85.572.303	1
14	Bolt		1
15	Washer		1
16*#	Rubber gasket		1
17	Impeller	85.572.453	1
18*	Mechanical seal	85.572.301	1

NO.	Description	Part number	QTY
19	Bolt		8
20	Spring washer		8
21	Washer		8
22	Suction flange	85.572.510	1
23*#	Check valve	85.572.455	1
24	Priming/drain cap		3
25*#	Priming/drain O-ring		3
26	Outlet flange	85.572.510	1
27*#	Outlet gasket		1
28	Mounting bolt		4
29*#	Seal washer		4
30	Cover hinge pin	85.572.316	2
31	Cover hinge retainer		2
32	Cover hinge bolt	85.572.315	2
*	Seal kit inc mech seal*	85.572.459	1
#	Seal kit inc items#	85.572.454	1
	Wet end Complete	85.572.330	1

Document no. BAR-PL014
Issued September 2021