Model 1130

Version:

Serial number:

Code: **22376**

29/07/2016

400 V - 50 Hz

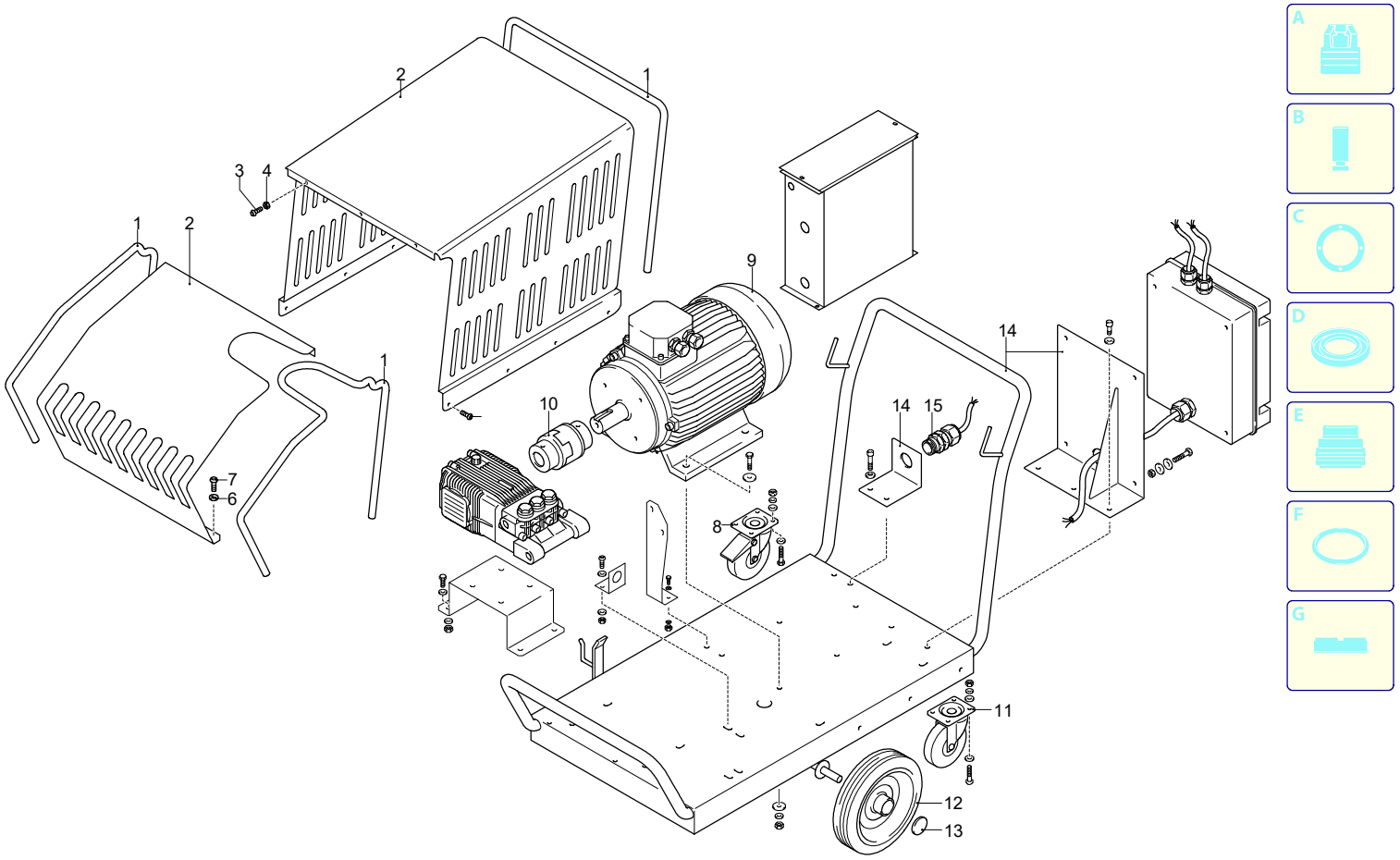

UN_CE_1088-FT

Validity	Pos.	Code	Description	Q
	1	50601	Gasket	1
	2	50644	Frame	1
	3	50547	Screw	3
	4	50526	Nut	7
	5	50499	Screw	9
	6	50519	Washer	3
	7	50499	Screw	9
	8	50449	Wheel	1
	9	50922	Motor	1
	10	50919	Flange	1
	11	50448	Wheel	1
	12	50905	Wheel	2
	13	50457	Guard	2
	14	50645	Frame	1
	15	50683	Gland	1

Model 1130

Version:

Serial number:

Code: **22376**

29/07/2016

400 V - 50 Hz

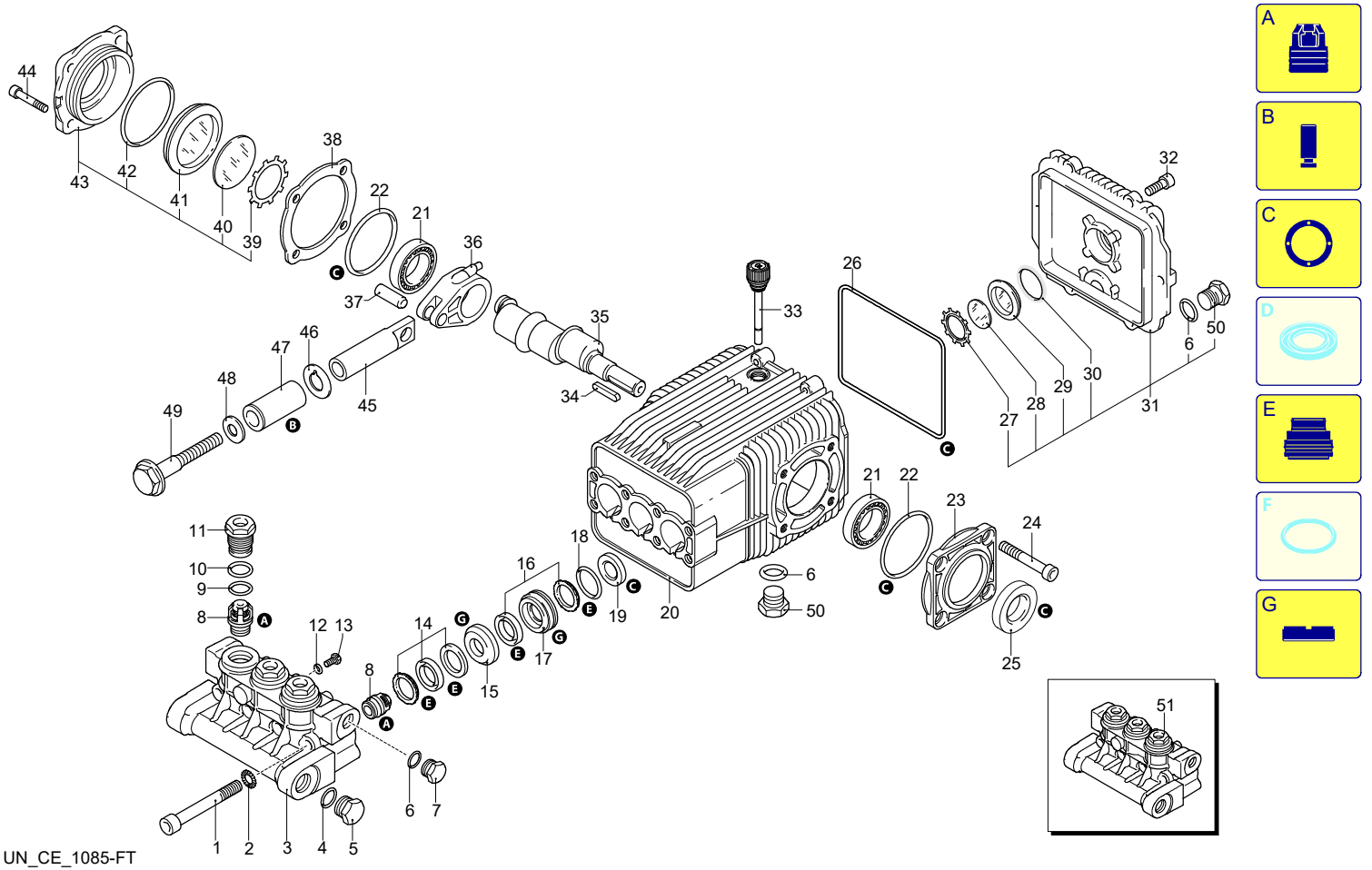

Validity	Pos.	Code	Description	Q
	1	850260	Screw	8
	2	650530	Washer	8
	3	1942190	Head	1
	4	180101	O-ring	1
	5	820361	Plug	3
	6	740290	O-ring	3
	7	1980740	Plug	1
	8	1949052	Complete valve	3
	9	880830	O-ring	3
	10	1941070	Ring	3
	11	1940940	Plug	3
	12	2460810	Screw	3
	13	1982570	Washer	3
	14	1942700	Gasket	3
	15	1942470	Piston guide	3
	16	1942690	Water seal	3
	17	1942480	Piston guide	3
	18	820490	O-ring	3
	19	1940560	Ring	3
	20	1941330	Pump body	1
	21	1140410	Bearing	2
	22	1941380	O-ring	2
	23	1941240	Support	1
	24	850370	Screw	4
	25	820680	Ring	1
	26	1940410	O-ring	1
	27	1260430	Ring	1
	28	1780690	Plate	1
	29	1260250	Level gauge	1
	30	1140450	O-ring	1
	31	1949010	Cover	1
	32	1200430	Screw	6
	33	1140370	Plug	1
	34	650250	Key	1
	35	1940970	Shaft	1
	36	1940051	Connecting-rod	3
	37	1940060	Pin	3
	38	1941390	Shim 0.05 mm	1
	38	1941400	Shim 0.10 mm	1
	38	1941410	Shim 0.19 mm	1
	38	1941420	Shim 0.25 mm	1
	39	1941290	Ring	1
	40	1941260	Plate	1
	41	1941270	Level gauge	1
	42	100410	O-ring	1
	43	1949011	Cover	1
	44	850370	Screw	4
	45	1940960	Piston	3
	46	1383190	Plate	3
	47	1941020	Piston	3
	48	1340600	Washer	3
	49	1940920	Screw	3
	50	1980740	Plug	2
	51	1949215	Head assembly	1
	A	2185	Valve kit	1
	B	2872	Piston kit	1
	C	2873	Oil seal kit	1
	E	2874	Water seal kit	1
	G	42120	Support ring kit	1

Model 1130

Version:

Serial number:

Code: **22376**

29/07/2016

230 V - 50 Hz

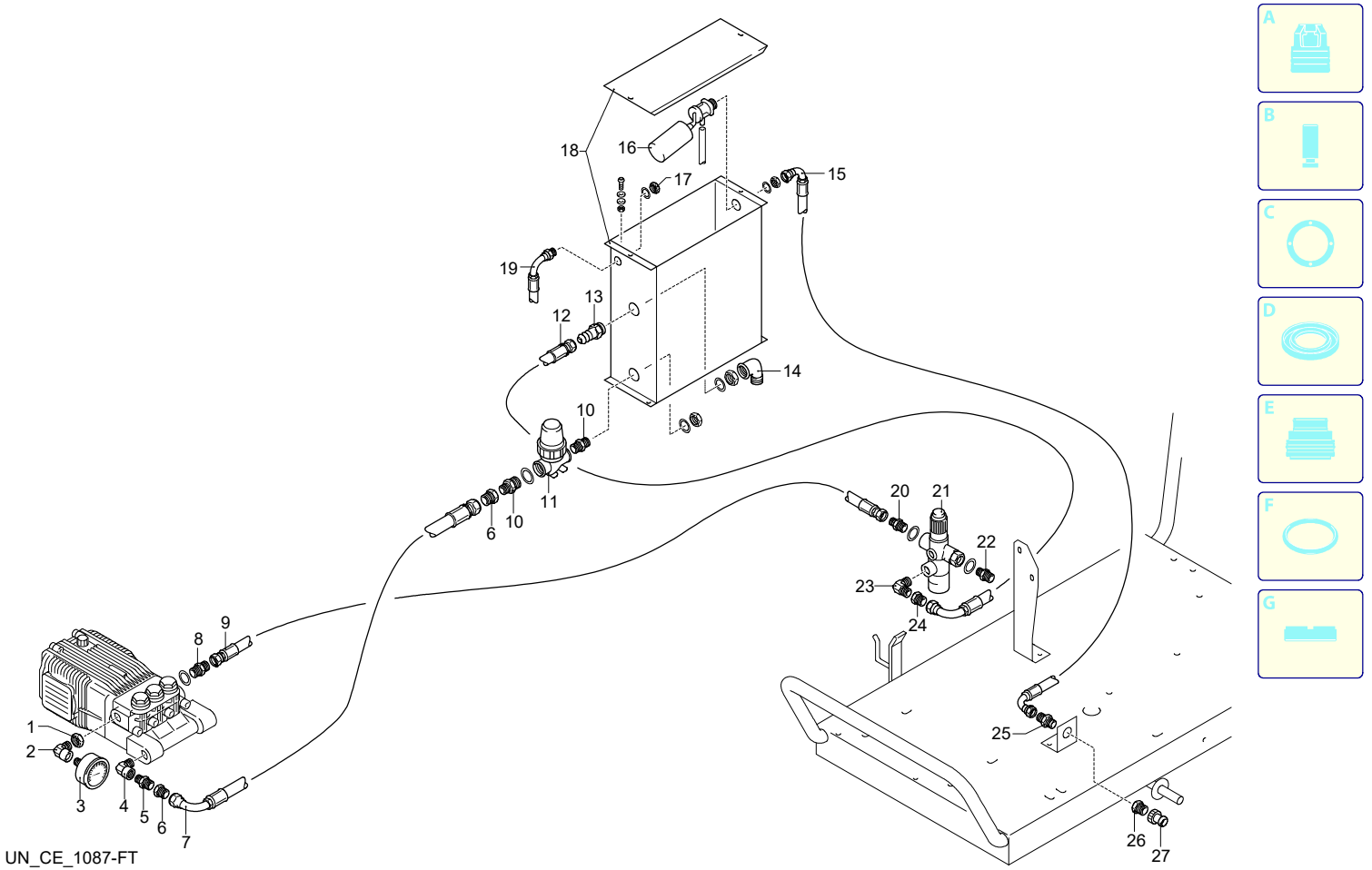

UN_CE_1087-FT

Validity	Pos.	Code	Description	Q
	1	50906	Nut	1
	2	50755	Fitting	1
	3	50910	Pressure gauge	1
	4	50908	Fitting	1
	5	50487	Fitting	1
	6	50913	Fitting	2
	7	50923	Pipe	1
	8	50907	Fitting	1
	9	50920	Pipe	1
	10	50489	Fitting	2
	11	50925	Filter	1
	12	51411	Pipe	2
	13	50537	Fitting	1
	14	50911	Fitting	1
	15	51410	Pipe	1
	16	50657	Float	1
	17	50528	Nut	1
	18	50918	Casing insert	1
	19	51412	Pipe	1
	20	50907	Fitting	2
	21	50929	Regulating valve	1
	22	50463	Fitting	2
	23	50909	Fitting	1
	24	50526	Nut	2
	25	50530	Fitting	1
	26	50909	Fitting	1
	27	50529	Fitting	1

Model 1130

Version:

Serial number:

Code: **22376**

29/07/2016

400 V - 50 Hz

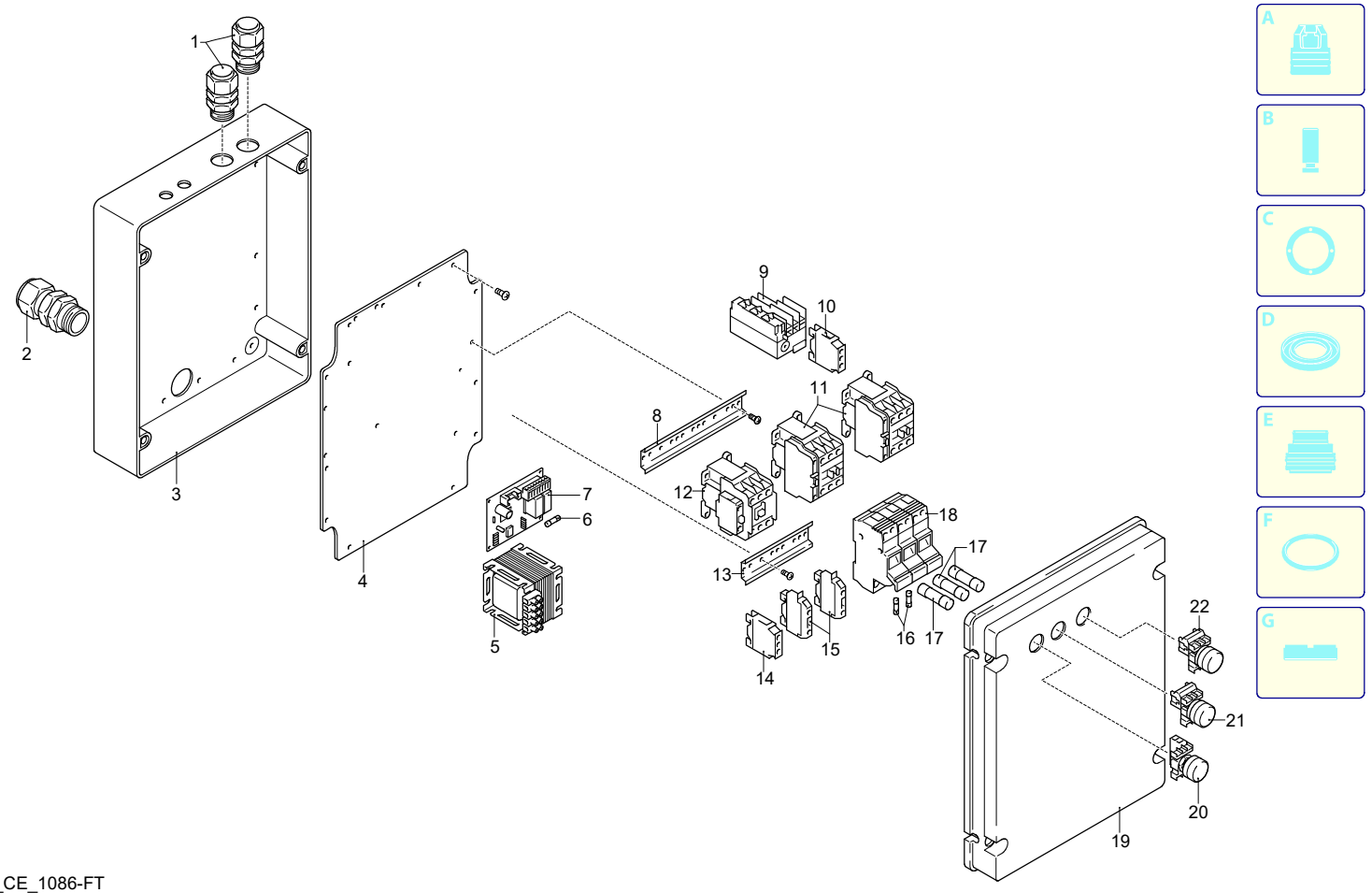

Validity	Pos.	Code	Description	Q
	1	50558	Gland	2
	2	50924	Gland	1
	3	50615	Box	1
	4	50616	Plate	1
	5	50582	Transformer	1
	6	50566	Fuse	1
	7	50565	Board	1
	8	50579	Bracket	1
	9	50916	Switch	1
	10	50567	Clamp	2
	11	50554	Electromagnetic switch	2
	12	50553	Electromagnetic switch	1
	13	50579	Bracket	1
	14	50567	Clamp	1
	15	50580	Fuse holder	2
	16	50566	Fuse	2
	17	50573	Fuse	3
	18	50570	Fuse holder	1
	19	50617	Box	1
	20	50915	Switch	1
	21	50914	Switch	1
	22	50572	Switch	1

UN_CE_1086-FT

Model 1130

Version:

Serial number:

Code: **22376**

29/07/2016

400 V - 50 Hz

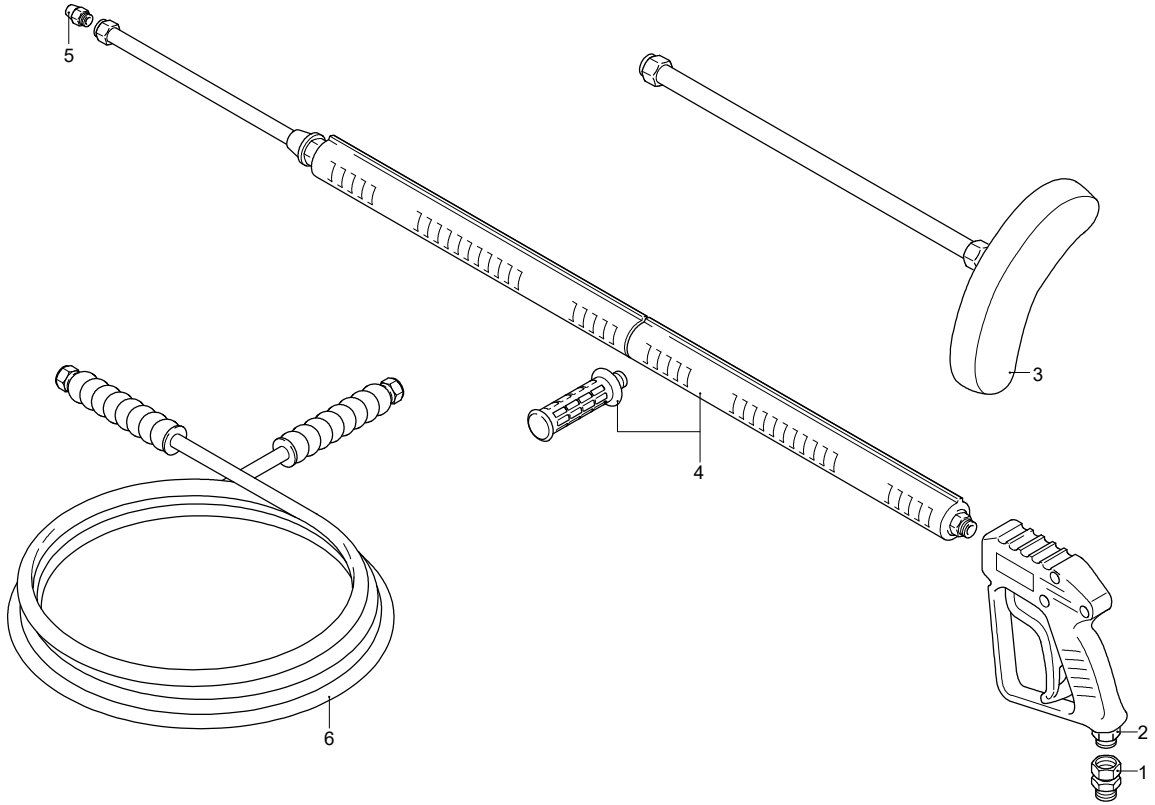

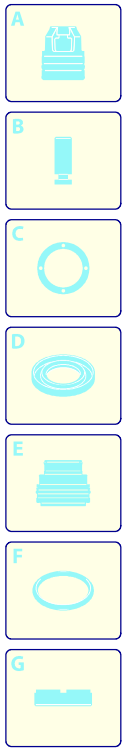

Validity	Pos.	Code	Description	Q
	1	50463	Fitting	1
	2	50926	Gun	1
	3	20927	Knob	1
	4	50262	Lance	1
	5	3076	Nozzle	1
	6	50263	High pressure hose	1

UN_CE_1089-FT