Model 1120

Version:

Serial number:

Code: **22374**

07/11/2015

400 V - 50 Hz

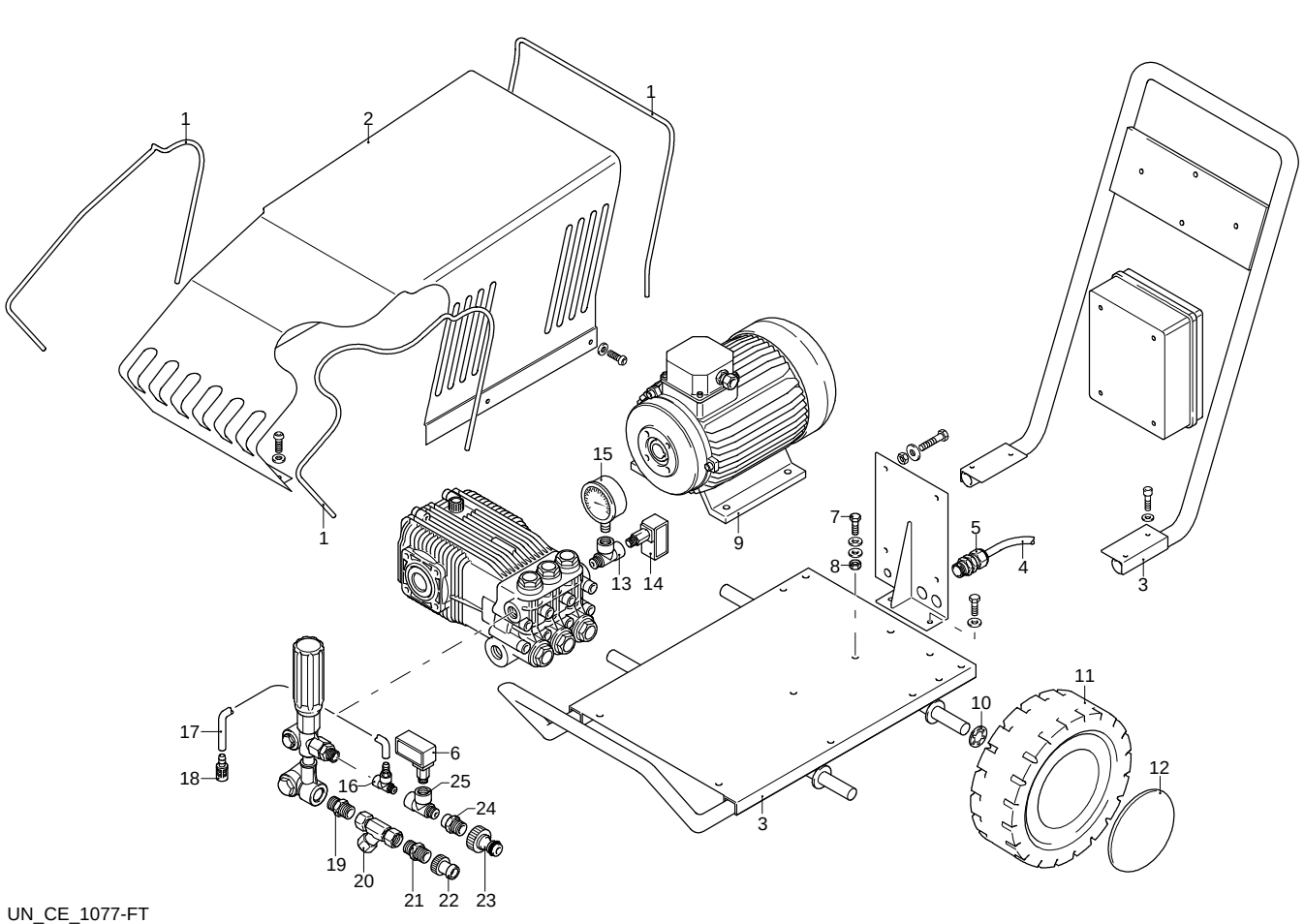

UN_CE_1077-FT

Validity	Pos.	Code	Description	Q
	1	50601	Gasket	1
	2	50642	Casing	1
	3	50643	Frame	1
	4	50552	Cable	1
	5	50559	Gland	1
	6	50685	Pressure switch	1
	7	50771	Screw	4
	8	50524	Nut	4
	9	4933	Motor	1
	10	50447	Spring	4
	11	50627	Wheel	4
	12	50628	Guard	4
	13	50479	Fitting	1
	14	50685	Pressure switch	1
	15	50484	Pressure gauge	1
	16	3062	Fitting	1
	17	50607	Pipe	1
	18	1341030	Filter	1
	19	50488	Fitting	1
	20	50474	Fitting	1
	21	50530	Fitting	1
	22	50469	Hose tail	1
	23	50481	Fitting	1
	24	50480	Fitting	1
	25	50479	Fitting	1

Model 1120

Version:

Serial number:

Code: **22374**

07/11/2015

400 V - 50 Hz

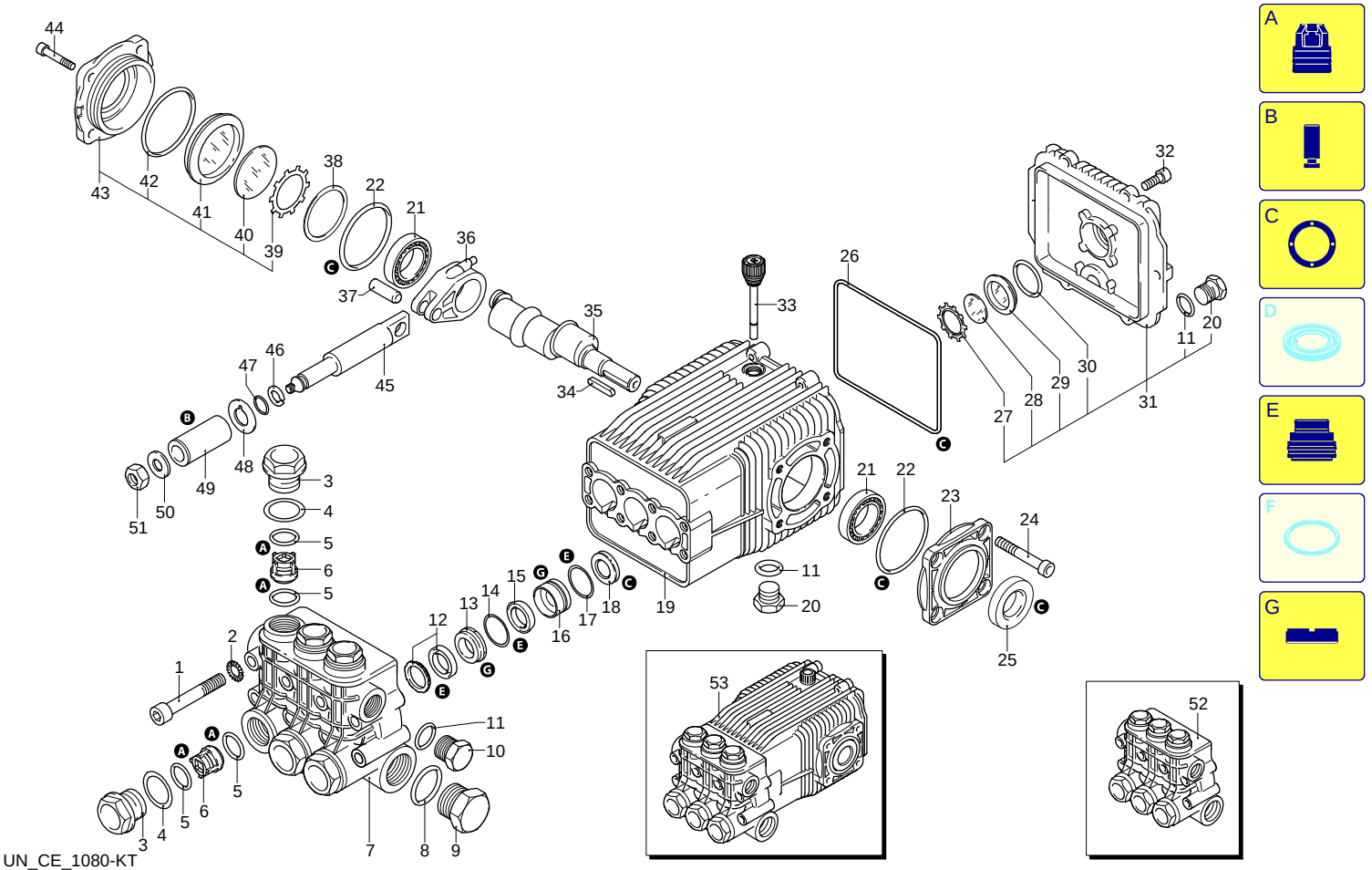

Validity	Pos.	Code	Description	Q
	1	1940260	Screw	8
	2	650530	Washer	8
	3	1940140	Plug	6
	4	1940150	Ring	6
	5	1140450	O-ring	12
	6	1949050	Complete valve	6
	7	1940021	Head	1
	8	550350	O-ring	1
	9	1140300	Plug	1
	10	1980740	Plug	3
	11	740290	O-ring	3
	12	1940440	Gasket	3
	13	1940430	Piston guide	3
	14	1941220	Gasket	3
	15	1940470	Gasket	3
	16	1940450	Piston guide	3
	17	820490	O-ring	3
	18	1940560	Ring	3
	19	1941330	Pump body	1
	20	1980740	Plug	1
	21	1140410	Bearing	2
	22	1941380	O-ring	2
	23	1941240	Support	1
	24	850370	Screw	4
	25	820680	Ring	1
	26	1940410	O-ring	1
	27	1260250	Level gauge	1
	28	1780690	Plate	1
	29	1260250	Level gauge	1
	30	1140450	O-ring	1
	31	1949010	Cover	1
	32	1200430	Screw	6
	33	1140370	Plug	1
	34	650250	Key	1
	35	1940180	Shaft	1
	36	1940051	Connecting-rod	3
	37	1940060	Pin	3
	38	1941390	Shim 0.05 mm	1
	38	1941400	Shim 0.10 mm	1
	38	1941410	Shim 0.19 mm	1
	38	1941420	Shim 0.25 mm	1
	39	1941290	Ring	1
	40	1941260	Plate	1
	41	1941270	Level gauge	1
	42	100410	O-ring	1
	43	1949011	Cover	1
	44	850370	Screw	4
	45	1940070	Piston	3
	46	1940120	Ring	3
	47	880840	O-ring	3
	48	960460	Plate	3
	49	1420430	Piston	3
	50	1940580	Washer	3
	51	1940570	Nut	3
	52	1949200	Head assembly	1
	53	20174	Pump assembly	1
	A	2780	Valve kit	1
	B	2650	Piston kit	1
	C	2781	Oil seal kit	1
	E	2782	Water seal kit	1
	G	2784	Piston guide kit	1

Model 1120

Version:

Serial number:

Code: **22374**

07/11/2015

400 V - 50 Hz

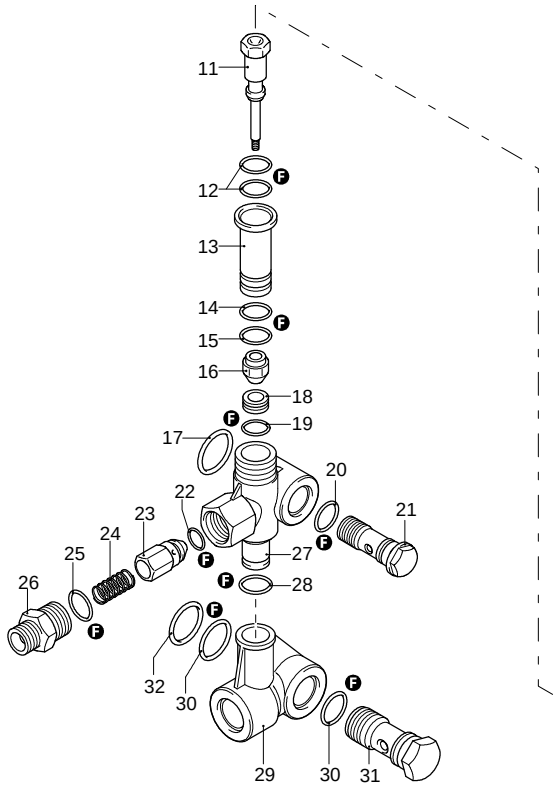

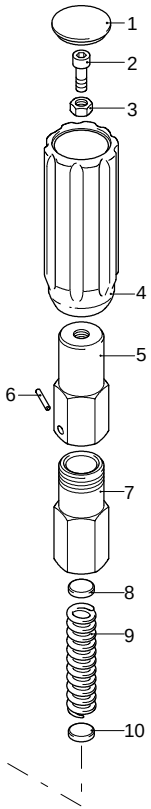

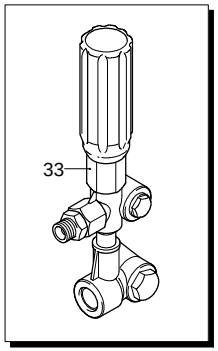

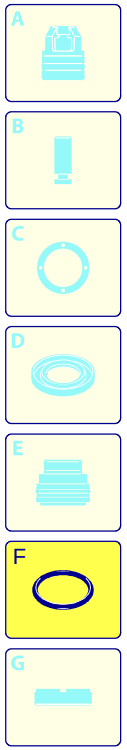

Validity	Pos.	Code	Description	Q
	1	1560580	Plug	1
	2	540290	Screw	1
	3	1660210	Nut	1
	4	1560400	Knob	1
	5	1560420	Screw	1
	6	1080070	Pin	1
	7	2260330	Guide	1
	8	2260140	Wobble plate	1
	9	1560350	Spring	1
	10	2260340	Wobble plate	1
	11	2260060	Piston	1
	12	2260100	O-ring	1
	13	2260040	Piston guide	1
	14	740290	O-ring	1
	15	394280	O-ring	1
	16	2260070	Shutter	1
	17	2260190	O-ring	1
	18	2260080	Seat	1
	19	1260740	O-ring	1
	20	390080	O-ring	1
	21	2260180	Screw	1
	22	1560150	O-ring	1
	23	1560100	Shutter	1
	24	1560140	Spring	1
	25	180101	O-ring	1
	26	1560111	Fitting	1
	27	2260170	Valve body	1
	28	390080	O-ring	1
	29	1560550	Suction fitting	1
	30	770260	O-ring	2
	31	1560760	Fitting	1
	32	550530	O-ring	1
	33	21840	Complete valve	1
	F	2193	Gasket kit	1

UN_CE_1078-FT

Model 1120

Version:

Serial number:

Code: **22374**

07/11/2015

400 V - 50 Hz

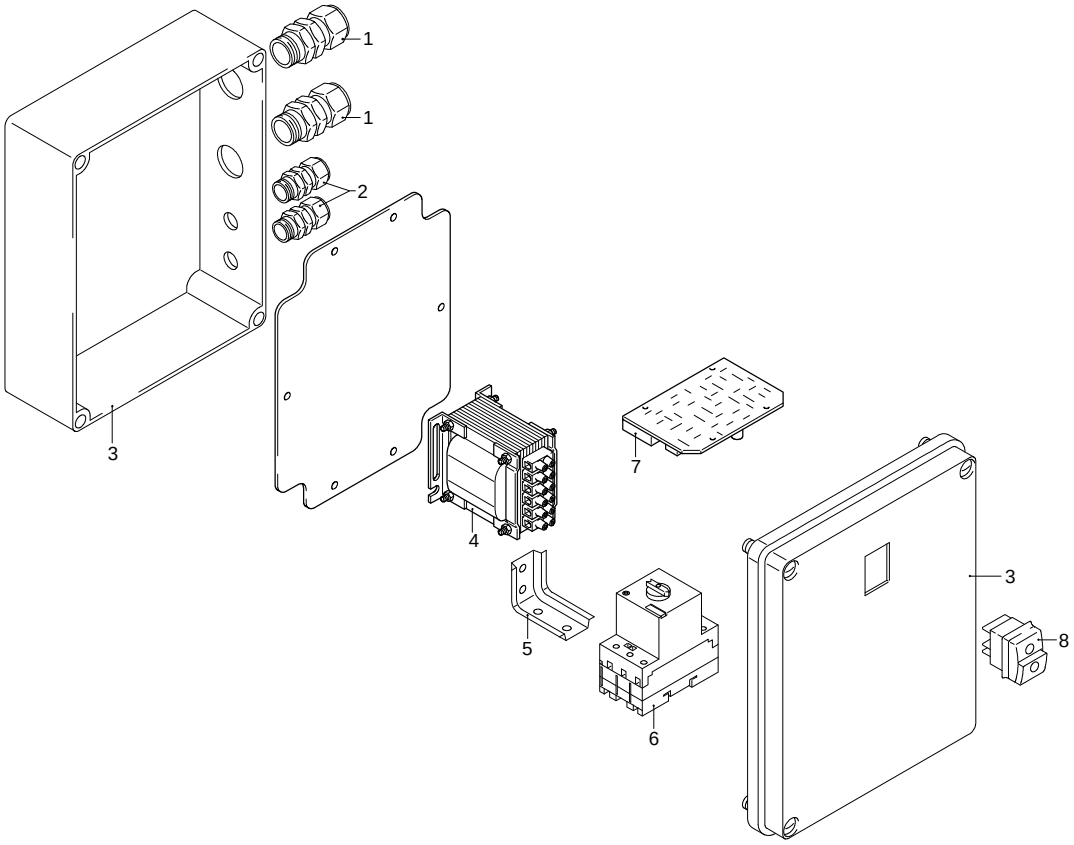

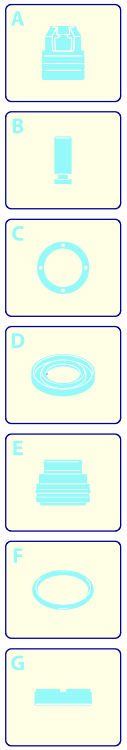

Validity	Pos.	Code	Description	Q
	1	50559	Gland	2
	2	50556	Gland	2
	3	50574	Box	1
	4	50582	Transformer	1
	5	50638	Bracket	1
	6	1382010	Switch	1
	7	50568	Board	1
	8	50674	Switch	1

UN_CE_1079-FT

Model 1120

Version:

Serial number:

Code: **22374**

07/11/2015

400 V - 50 Hz

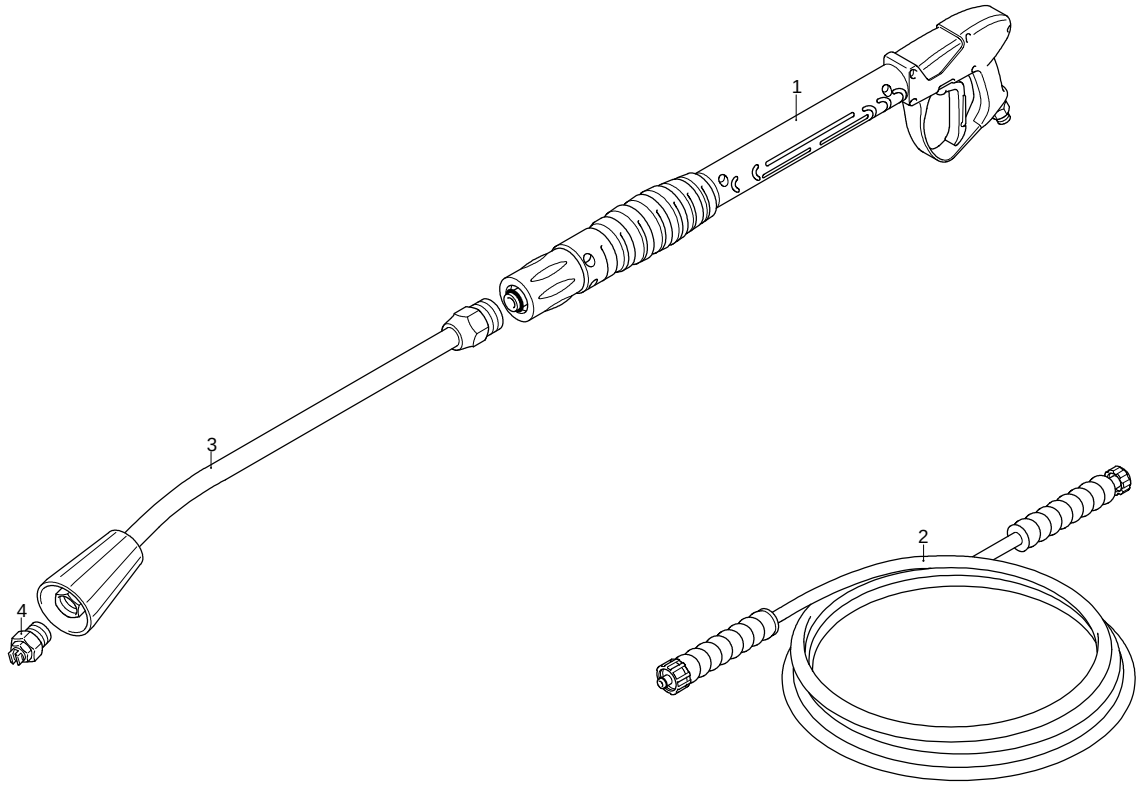

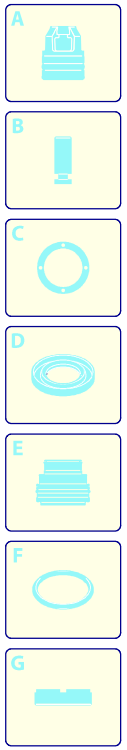

Validity	Pos.	Code	Description	Q
	1	41847	Gun	1
	2	50247	High pressure hose	1
	3	40826	Lance	1
	4	3089	Nozzle	1

UN_CE_1081-FT