WATER SANDBLASTING KIT

For suction-fed injection of sand into the water stream for abrasive cleaning.

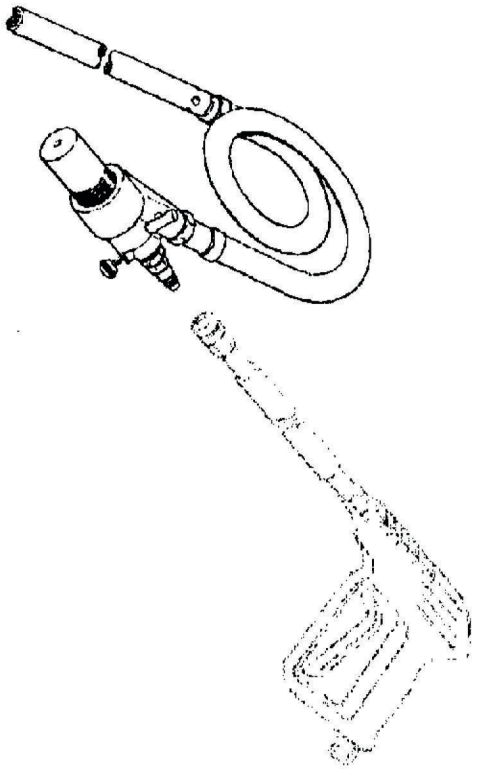

SPECIFICATIONS

Part Number	10200001	10200001P	103201
Description	Sandblast Kit Complete	Sandblast Kit Less Hose and Sand Probe	Mixing Head Complete
Maximum Working Pressure	3500 PSI	3500 PSI	3500 PSI
Min. Working Pressure	1500 PSI	1500 PSI	1500 PSI
Max. Flow	10 GPM	10 GPM	10 GPM
Minimum Flow	3 GPM	3 GPM	3 GPM
Max. Temperature	200˚F	200˚F	200˚F
Weight	13 lb.	2.5 lb.	2.0 lb.
Material	Plated Carbon Steel, Stainless Steel, Brass, Aluminum, Rubber, Tungsten Carbide, Plastic	Stainless Steel, Brass, Tungsten Carbide, Aluminum, Plastic	Stainless Steel, Brass, Tungsten Carbide, Aluminum.

10200001 SANDBLASTING KIT COMPLETE

No.	Part No.	Description	Qty.
1.	103202	Sand Nozzle	1
2.	500002	Mixing Head	1
3.	202004	Air/Sand Valve	1
4.	202003	Thumbscrew	1
5.	*	Spray Nozzle (not included)	
6.	680012	Nozzle Holder	1
7.	680013	Male Quick Disconnect	1
8.	680001	Hosebarb	2
9.	680014	Hose Clamp	1
10.	680002	Hose	1
11.	103200	Sand Probe	1
	10200001P	Sand Kit less Hose and Probe Includes items 1 thru 8 *	
	103201	Mixing Head Complete Includes items 2 thru 8*	

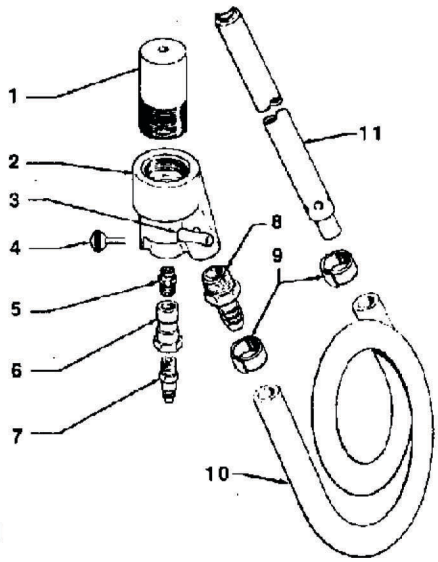

***Wand, Gun and Spray Nozzle Not Included**
If an angle nozzle is used, it must be turned at least every 15 minutes of use to avoid excessive wear in one area.

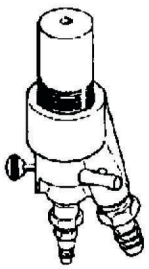

10200001P SANDBLASTING KIT LESS HOSE AND PROBE

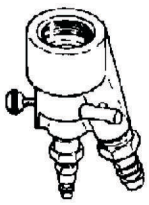

103201 MIXING HEAD COMPLETE

OPERATION

Always wear protective clothing including safety glasses while operating machine.

Place the sand induction probe in the sand supply container.

Connect the mixing head to the spray wand. Start the machine per manufacturer's instruction.

Trigger the gun to activate the spray.

Check the distance to hold the spray nozzle from the surface by starting to spray at a scrap of material from a distance of several feet. Gradually move closer, checking frequently to see if the high pressure spray is damaging the surface.

Refer to the application table for the type of sand recommended for your work surface.

Always point the sand nozzle downward when not spraying. This will prevent water from entering the sand supply. If water does get into the sand supply hose, remove the probe from the sand, hold control handle trigger open, and let the hose air dry. Always be sure the sand hose is dry before using.

Keep the sand covered to prevent the overspray from wetting the sand. Do not allow small fragments of the sand bag to fall into the sand supply. A small paper fragment could prevent the flow of sand.

After the sandblasting operation is complete, remove the probe from the sand, trigger the gun to clear the hose and probe of sand. Then remove the hose from the mixing head and rinse with water to remove all the sand before storage.

OPERATION

Sand Mesh: Sand mesh refers to the size of screen through which a particular grade of sand will pass. A 16/50 mesh means that normally, most of the these particles will pass through a #16 screen and a very small percentage will pass through a #50 screen.

Note: A #16 screen has sixteen 0.046 holes per sq.in.

Round Sand: This refers to the round edge of the grain of sand. River sand is a good example of sand worn to its shape by water.

Angular Sand: This refers to grains of sand which have triangular shaped edges. Crushed rock or sand is usually of this type

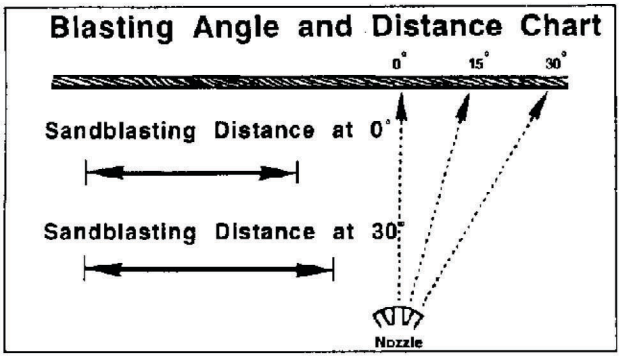

Blasting Angle and Distance: The blasting angle can affect the sandblasting distance. For the best sandblasting performance always maintain the recommended blasting angle and the proper distance for your work surface .

Sand Mesh Chart Removal of:	Sand Mesh	Sand Type	Blasting Angle
Paint from Metal	20/40	Round Silica	0-30°
Paint from Masonary	20/40	Round Silica	0-20°
Rubber Base Paint from Mansonary	10/35	Angular	0-15°
Paint from Wood (Course, Rough Cut Effect)	40/60	Round	1-10°
Paint from Wood (Smoother, Drift-Wood Effect)	20/40	Round	1-10°
Metal Scale	20/40	Round	0-15°
Rust	16/50	Angular	0-25°

TROUBLESHOOTING

PROBLEM	PROBABLE CAUSE	SOLUTION
No sand	Plugged sand probe.	Clear obstructions, and make sure air vents in sand probe are open.
	Plugged gun.	Remove mixing nozzle, and inspect mixing chamber.
	Wet Sand.	Dry or replace sand.
	Low Vacuum.	Close sand/air valve, or repair air leak in system.
Not enough sand	Low water pressure	Check pump and spray tip for proper operation.
	Incorrect spray tip.	Change to 15° spray angle
	Collapsed hose.	Replace hose, or remove restriction.
	Partial obstruction to sand probe	Clear obstruction from sand probe inlet.
Spray Tip Replacement	Spray tip replacement is made by removing the nozzle holder. The assembly should be thoroughly cleaned of sand to prevent damage to the threads and clogging of the sand nozzle. A 9/16" socket can be used to remove and install the new spray tip.	

GENERAL PUMP

1174 Northland Drive • Mendota Heights, MN 55120 • Phone: (651) 686-2199 • FAX: (800) 535-1745
email: sales@gpcompanies.com • www.generalpump.com

Ref 300078 Rev. A
5/05