GENERAL PUMP *A member of the Interpump Group*

High Limit Thermal Switches



FEATURES/BENEFITS

- Simple installation
- 68” 18 AWG Cable
- Normally Closed
- Can be mounted in any position
- Factory calibrated
- Made in the USA
- UL recognized component

SPECIFICATIONS

Part Number	Temperature	Description
101094	122° F / 50° C	1/2” NPT
101116	130° F / 55° C	3/8” NPT
101113	150° F / 65° C	1/2” NPT
101138	190° F / 88° C	1/2” NPT
101093	230° F / 110° C	1/2” NPT
101132	230° F / 110° C	3/8” NPT
101119	250° F / 120° C	1/2” NPT
101120	250° F / 120° C	3/8” NPT
Max Pressure		5,000 PSI
Voltage		5 AMPS at 120 VAC
Cord Length		68”
Weight		0.5 lb.
Dimensions		2.8” x 1”
Materials		Brass, Steel, Nylon, Epoxy

DIMENSIONS

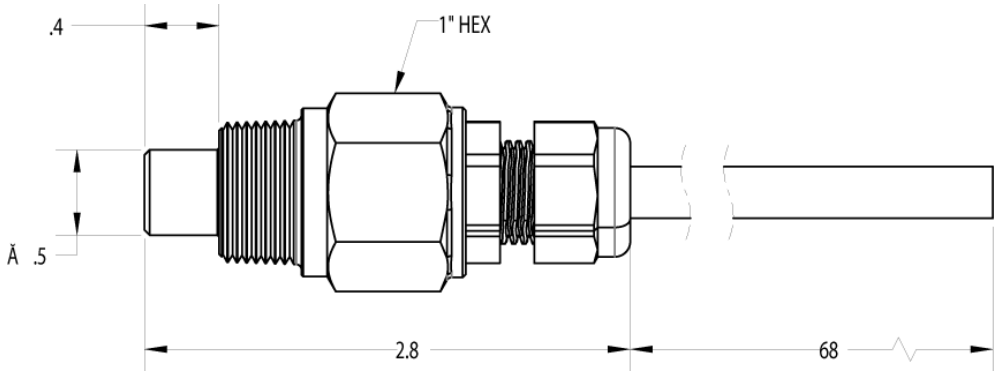

For use in the USA and Canada only
Device accuracy ± 10° C

ACCESSORIES

General Pump
is a member of
the Interpump Group

GENERAL PUMP • 1174 Northland Drive • Mendota Heights, MN 55120
Phone: 651.686.2199 • Fax: 800.535.1745 • email: sales@gpcompanies.com • www.generalpump.com

Ref 310113 Rev F
01-20

GENERAL PUMP