GENERAL PUMP *A member of the Interpump Group*

GP Flow Switch

GENERAL PUMP FLOW SWITCHES

The General Pump flow switch is designed to operae in response to a low volume, low pressure flow and still allow for a high pump output flow. The system will provide reliable switching with as little as .75 GPM flow and 18 PSI from the city water supply and will also allow pump output flow up to 18.7 GPM @ 5,000 PSI with negligible pressure drop through the valve. General Pump flow switches provide durable, reliable on/off switching for systems that require start/stop capability.



SPECIFICATIONS

Part Number	101121 (no pilot feature)
Maximum Volume	18.7 GPM
Maximum Pressure*	5,000 PSI
Minimum Volume	(.75 GPM)
Minimum Pressure	18 PSI
Switch Contact Ratings	@ 24 Volts DC: 75 Watts, 3A
	@ 120 Volts AC: 100 Watts, .8A
Maximum Temperature	190° F
Dimensions	4.25” x 4.5” x 1.25”
	with 8 foot lead wire
Weight	2.5 lbs.
Material	Brass, Stainless Steel, Buna-N

*Minimum burst pressure is 4X working pressure.

ELECTRICAL

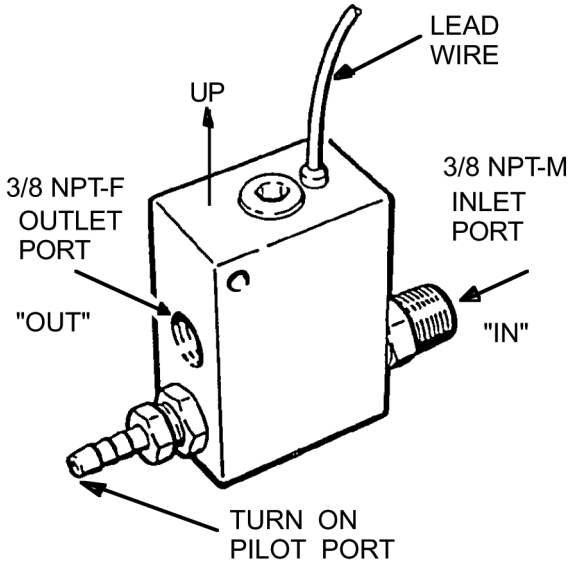

SWITCHES & CONTROLS

GENERAL PUMP *A member of the Interpump Group*

GP Flow Switch

PARTS LIST

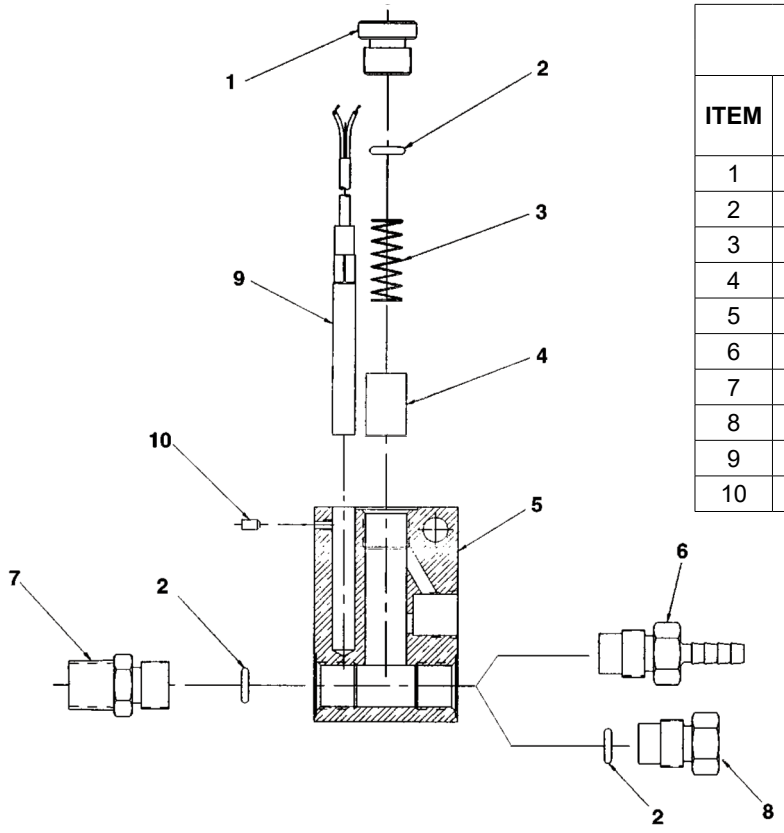

			Quantity	
			100329	103011
ITEM	PART #	DESCRIPTION	W/ pilot	No pilot
1	510018	Plug	1	1
2	701112	O-ring, .487 x .103	2	3
3	720003	Spring, Piston	1	1
4	103018	SS Piston Assembly	1	1
5	510014	Body, Valve	1	1
6	100331	Assembly, Pilot Valve	1	-
7	510015	Filling, Inlet	1	1
8	510013	Plug, Piston Stop	-	1
9	103022	Reed Switch Assembly	1	1
10	202010	Set Screw	1	1

INSTALLATION

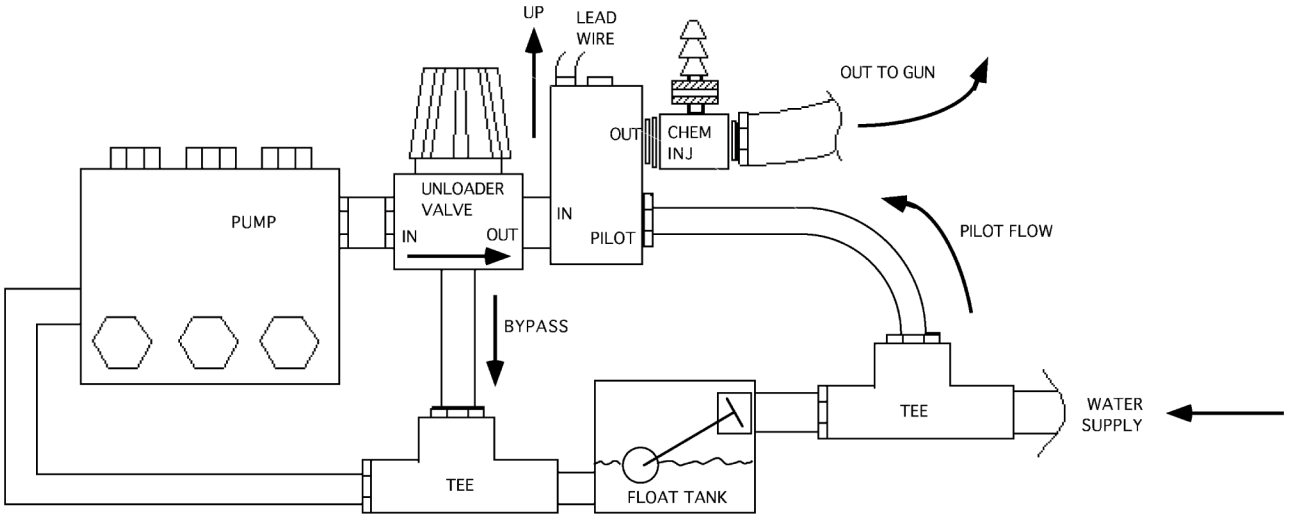

Install the flow switch ***vertically*** to the output side of the unloader, with the 2 conductor lead wires exiting from the top. If your system uses a downstream chemical injector, it should be mounted on the output side of the flow switch.

GENERAL PUMP • 1174 Northland Drive • Mendota Heights, MN 55120
Phone: 651.686.2199 • Fax: 800.535.1745 • email: sales@gpcompanies.com • www.generalpump.com

Ref 310131 Rev A
07-18

GENERAL PUMP