Model 1010-N

Version:

Serial number:

Code: **25282**

07/11/2015

400 V - 50 Hz

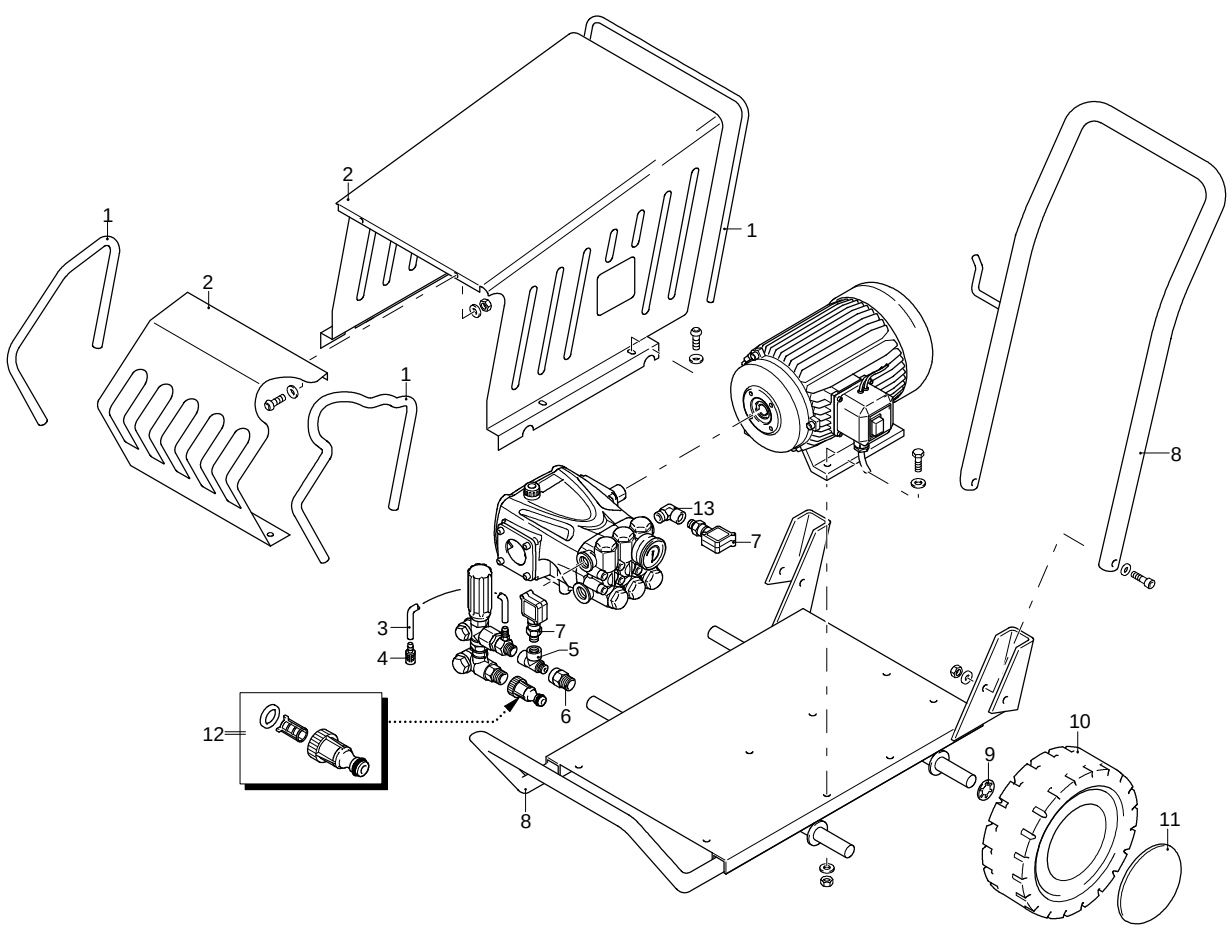

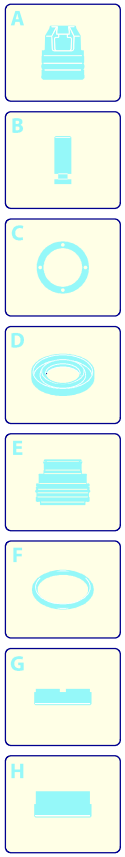

Validity	Pos.	Code	Description	Q
	1	50601	Gasket	3
	2	51387	Casing	1
	3	1262790	Detergent hose	1
	4	1341030	Filter	1
	5	50531	Fitting	1
	6	1122260	Fitting	1
	7	51219	Pressure switch	3
	8	50641	Frame	1
	9	50447	Spring	4
	10	50627	Wheel	4
	11	50628	Guard	4
	12	3260170	Fitting	1
	13	51220	Fitting	1

UN_CE_1527-JR

Model 1010-N

Version:

Serial number:

Code: **25282**

07/11/2015

400 V - 50 Hz

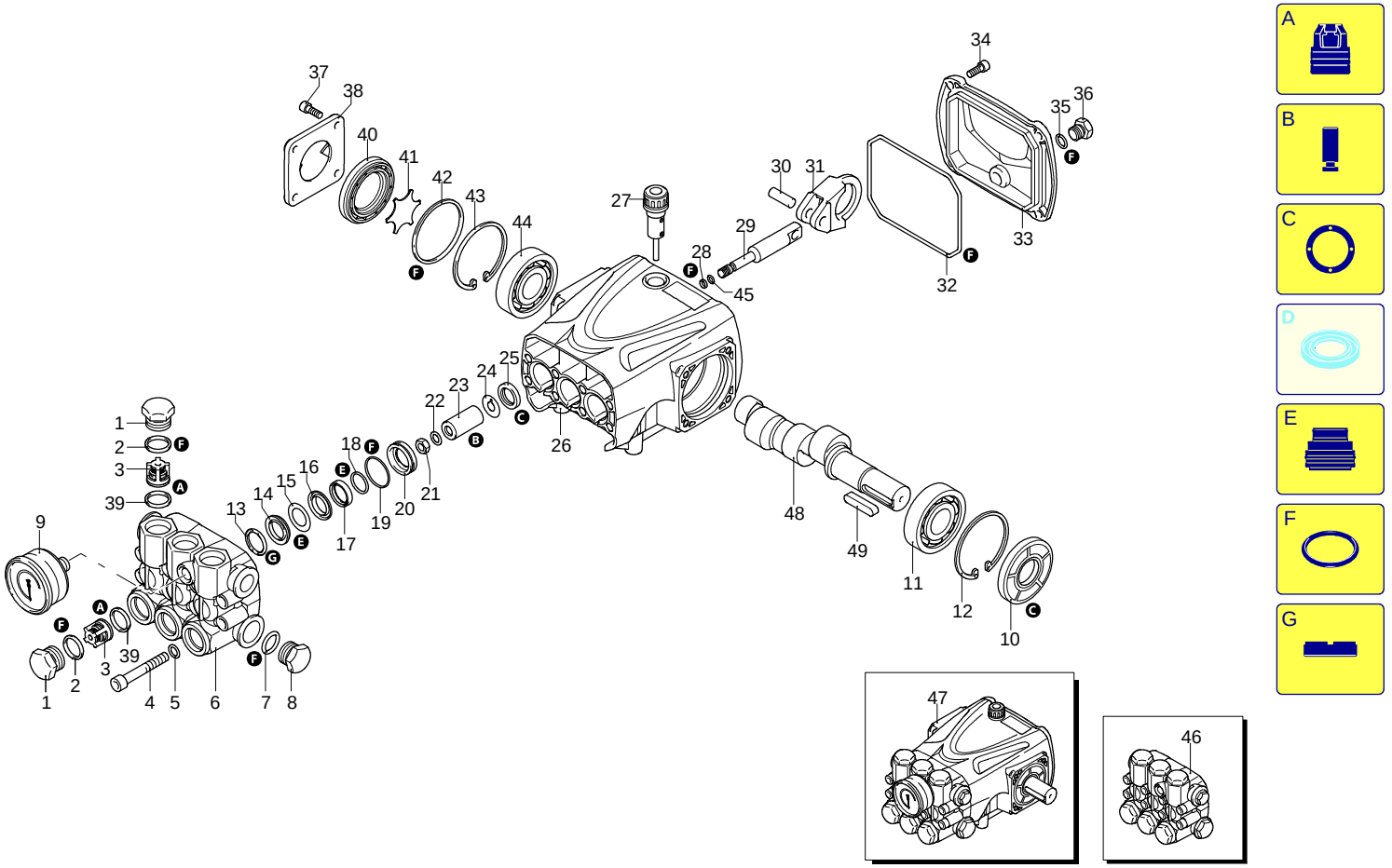

UN_CE_1528-JR

Validity	Pos.	Code	Description	Q
	1	960090	Plug	6
	2	960160	O-ring	6
	3	1389051	Complete valve	6
	4	800860	Screw	8
	5	1381850	Washer	8
	6	3220020	Head	1
	7	180101	O-ring	1
	8	820361	Plug	1
	9	1381580	Pressure gauge	1
	10	3220280	Ring	1
	11	1981210	Bearing	1
	12	200390	Ring	1
	13	1780140	Ring	3
	14	1780720	Water seal	3
	15	3200250	Ring	3
	16	3220130	Piston guide	3
	17	3200142	Gasket	3
	18	3200260	Ring	3
	19	770260	O-ring	3
	20	3220120	Piston guide	3
	21	1260110	Nut	3
	22	1260100	Washer	3
	23	1780080	Piston	3
	24	1260091	Plate	3
	25	1260460	Oil seal	3
	26	3220010	Pump body	1
	27	880130	Plug	1
	28	480480	O-ring	3
	29	3220060	Piston	3
	30	3220070	Pin	3
	31	3220040	Connecting-rod	3
	32	651540	O-ring	1
	33	3220030	Cover	1
	34	3200220	Screw	4
	35	820510	O-ring	1
	36	880581	Plug	1
	37	1200430	Screw	4
	38	3200070	Support	1
	39	880830	O-ring	1
	40	3220080	Level gauge	1
	41	3200090	Plate	1
	42	650560	O-ring	1
	43	200390	Ring	1
	44	1981210	Bearing	1
	45	1080550	Ring	3
	46	3229200	Head assembly	1
	47	23772	Pump	1
	48	3220310	Shaft	1
	49	3200230	Key	1
	A	2864	Valve kit	1
	B	2746	Piston kit	1
	C	42547	Oil seal kit	1
	E	42549	Water seal kit	1
	F	42550	Gasket kit	1
	G	2745	Support ring kit	1

Model 1010-N

Version:

Serial number:

Code: **25282**

07/11/2015

400 V - 50 Hz

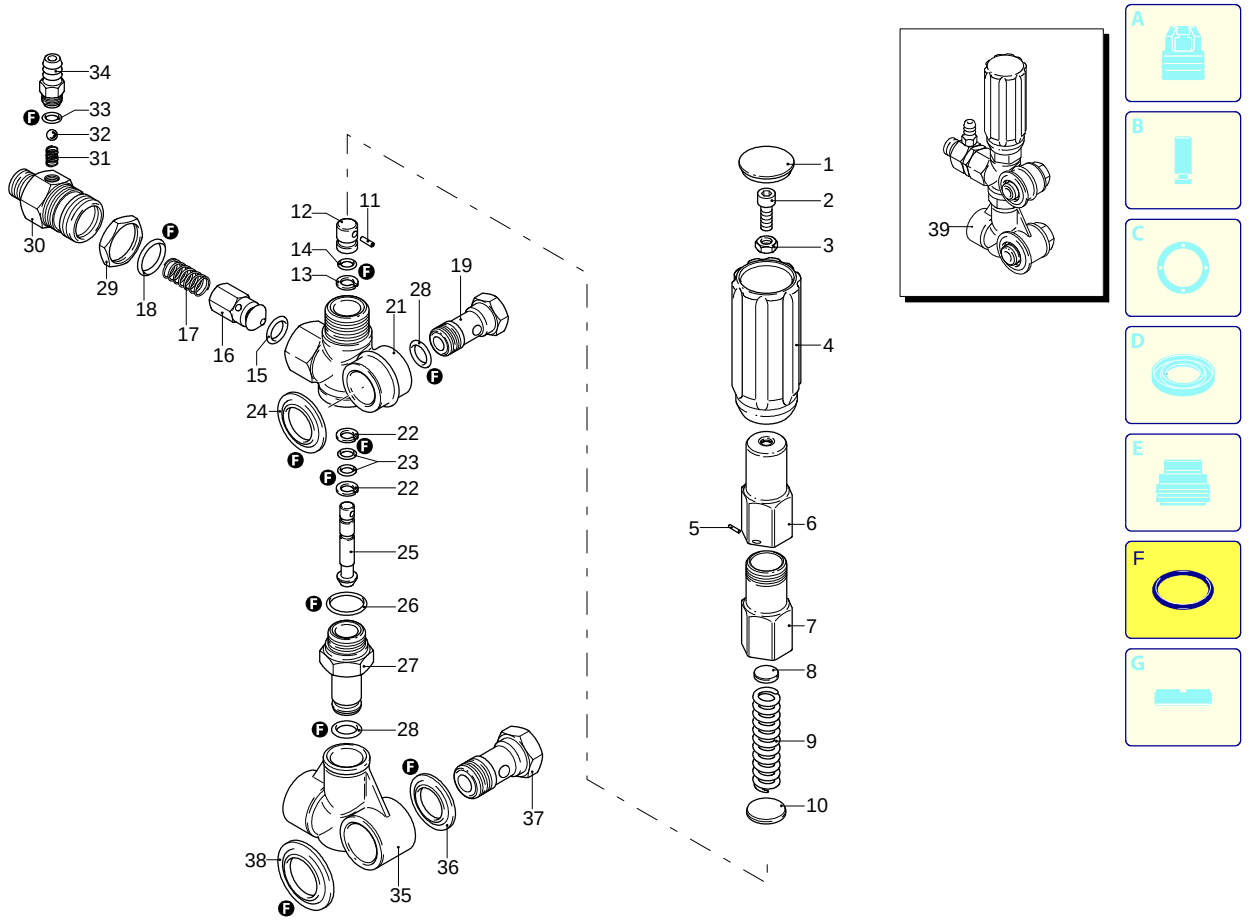

Validity	Pos.	Code	Description	Q
	1	1560580	Plug	1
	2	540290	Screw	1
	3	1660210	Nut	1
	4	1560400	Knob	1
	5	1080070	Pin	1
	6	1560420	Screw	1
	7	1560410	Guide	1
	8	1560440	Wobble plate	1
	9	1560350	Spring	1
	10	1080610	Wobble plate	1
	11	1080660	Pin	1
	12	1080540	Piston	1
	13	391000	O-ring	1
	14	1080640	Ring	1
	15	1560150	O-ring	1
	16	1560100	Shutter	1
	17	1560140	Spring	1
	18	180101	O-ring	1
	19	1540272	Screw	1
	21	1560010	Valve body	1
	22	1080550	Ring	2
	23	480480	O-ring	2
	24	1560280	Washer	1
	25	1560320	Piston	1
	26	880270	O-ring	1
	27	1560051	Fitting	1
	28	390080	O-ring	2
	29	1560510	Nut	1
	30	1560530	Fitting	1
	31	1560520	Spring	1
	32	1250280	Ball	1
	33	480480	O-ring	1
	34	1560490	Hose tail	1
	35	1540020	Suction fitting	1
	36	1540120	Washer	1
	37	1540090	Fitting	1
	38	1560290	Washer	1
	39	20082	Complete valve	1
	F	2611	Gasket kit	1

Model 1010-N

Version:

Serial number:

Code: **25282**

07/11/2015

400 V - 50 Hz

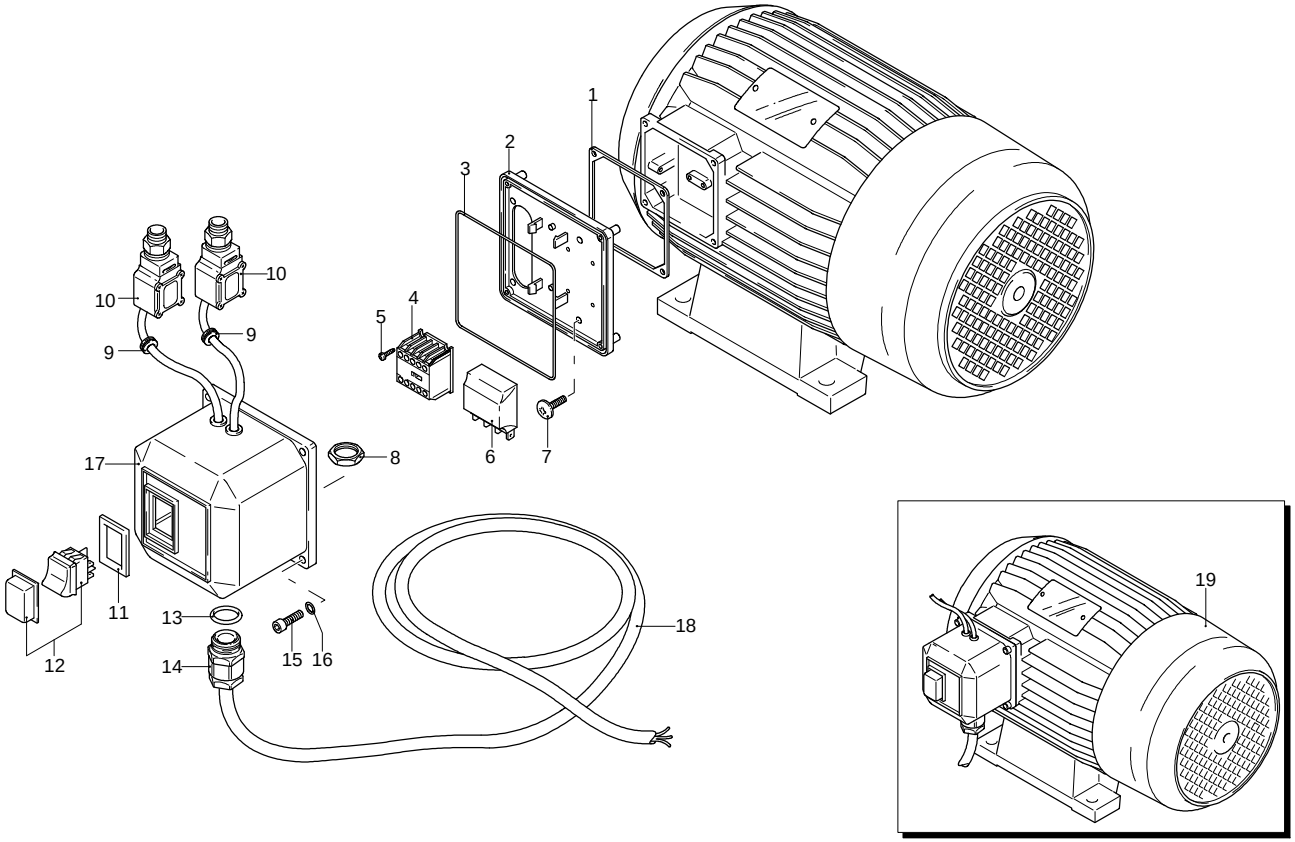

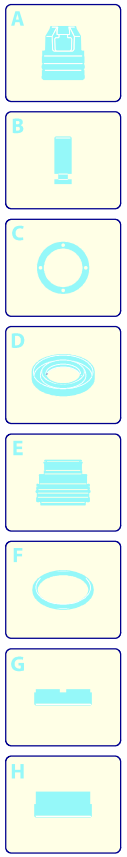

Validity	Pos.	Code	Description	Q
	1	50068	Gasket	1
	2	1700080	Plate	1
	3	1940410	O-ring	1
	4	2360950	Mini-contactor	1
	5	1261570	Screw	1
	6	2360590	Board	1
	7	1460460	Screw	1
	8	1700590	Nut	1
	9	2021480	Gland	2
	10	51219	Pressure switch	2
	11	1341140	Gasket	1
	12	2360730	Switch	1
	13	880270	O-ring	1
	14	1382380	Cable gland	1
	15	1261560	Screw	1
	16	1080190	O-ring	1
	17	1701070	Box	1
	18	1700640	Cable	1
	19	44752	Motor	1

UN_CE_1046-ET

Model 1010-N

Version:

Serial number:

Code: **25282**

07/11/2015

400 V - 50 Hz

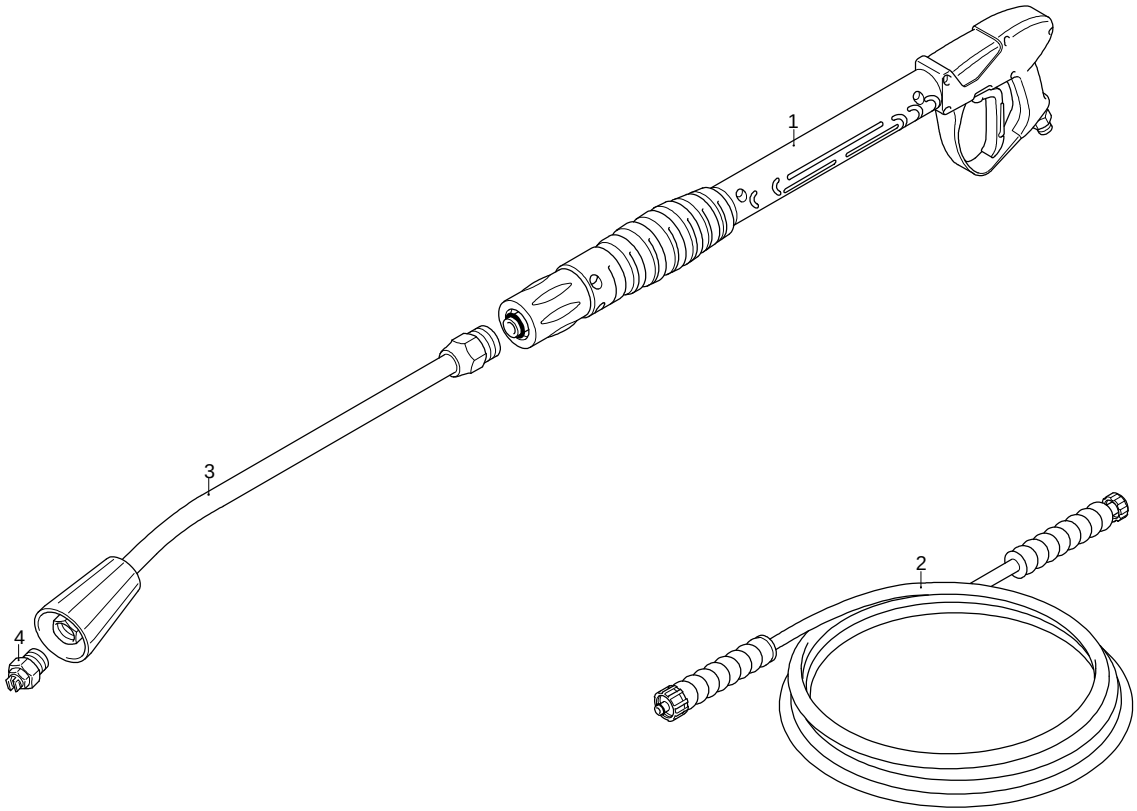

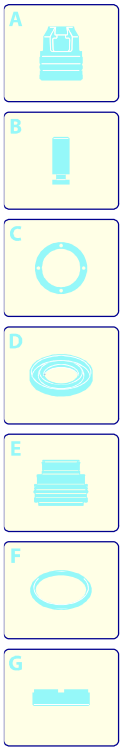

Validity	Pos.	Code	Description	Q
	1	41847	Gun	1
	2	3160170	High pressure hose	1
	3	40826	Lance	1
	4	3095	Nozzle	1

UN_CE_1696-FQ