GENERAL PUMP *A member of the Interpump Group*

TMT FLOW SWITCH

Tri-Magnet Technology Inline Flow Switch



SPECIFICATIONS

Part Number		**100919**
Maximum Operating Pressure		5800 PSI
Minimum Flow Required for Activation		0.5 GPM @ 50 PSI
Maximum Operating Flow		12.0 GPM
Operating Temperature Range		40 - 180 ºF
Electrical Lead Length		48" - 18AWG
Switch Ratings	Max Switching Voltage	250 VAC
	Max Switching Current	5 AMPS
	Resistance with Leads	30 OHM
	Electrical Service Life	200,000 Cycles
	Mechanical Service Life	10,000,000 Cycles
Ports	Inlet	3/8" x 18 NPT-F
	Outlet	3/8" x 18 NPT-F
Dimensions		3.3" x 1.4" x 2.9"
Weight		1.0 LBS
Materials	Stainless Steel, Plastic, Nickel Plated Neodymium	

FEATURES

- Micro-switch technology eliminates reed switch
- Activates with as little as .5 gpm flow
- Minimal pressure drop up to 8 gpm flow
- Can be mounted in any position

EXPLOSION

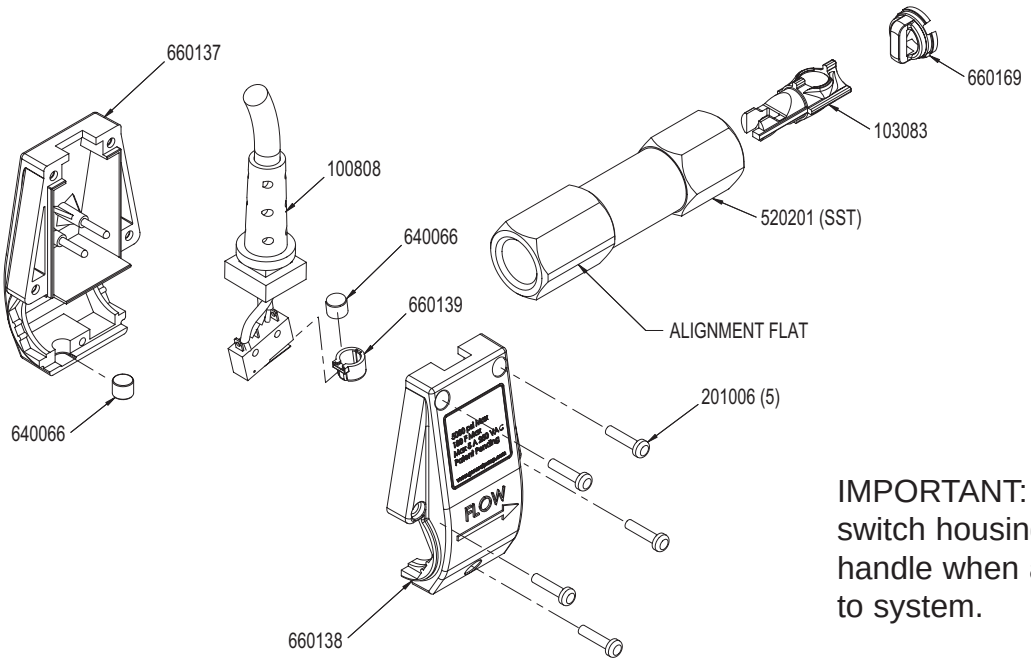

IMPORTANT: Do not use switch housing as a handle when assembling to system.

DIMENSIONS AND WIRING SCHEMATIC

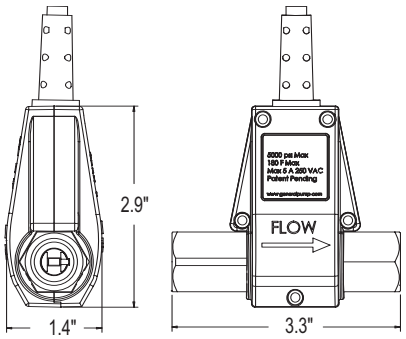

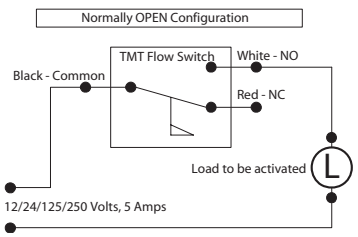

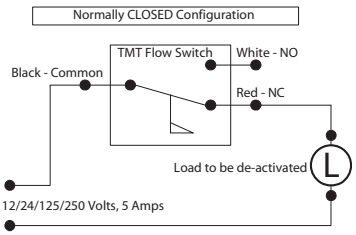

GENERAL PUMP 1174 Northland Drive • Mendota Heights, MN 55120
Phone: (651)454-6500 • Fax: (651)454-4524 • e-mail: sales@gpcompanies.com • www.generalpump.com

300526 Rev. B
10-04

GENERAL PUMP

ACCESSORIES