Model 1008 (RK)

Version:

Serial number:

Code: **25305**

10/09/2015

400 V - 50 Hz

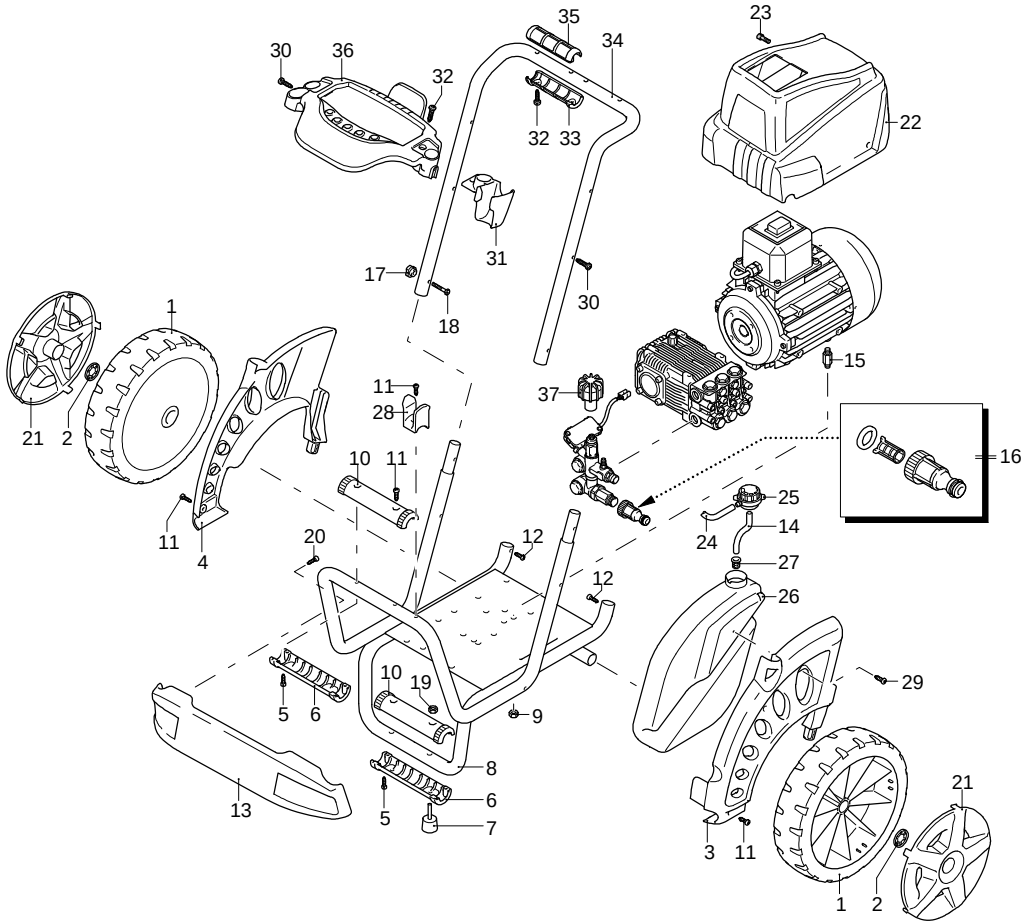

A

B

C

D

E

F

G

H

Validity	Pos.	Code	Description	Q
	1	3600140	Wheel	2
	2	3600180	Washer	2
	3	3600010	Guard	1
	4	3600020	Guard	1
	5	2000110	Screw	8
	6	3600040	Guard	2
	7	3600190	Vibration damper	2
	8	3600121	Frame	1
	9	380240	Nut	4
	10	3600200	Guard	2
	11	2060200	Screw	5
	12	2100300	Screw	2
	13	3600321	Guard	1
	14	3600410	Detergent hose	1
	15	2360580	Stud bolt	4
	16	3082130	Water coupling kit	1
	17	50019	Knob	2
	18	50037	Screw	2
	19	1060120	Nut	2
	20	2021780	Screw	2
	21	3600031	Guard	2
	22	3600671	Casing	1
	23	850250	Screw	3
	24	3600410	Detergent hose	1
	25	42113	Plug assembly	1
	26	3600250	Tank	1
	27	2000230	Filter	1
	28	3600070	Accessories carrier	1
	29	2360360	Screw	1
	30	2060200	Screw	2
	31	3600060	Accessories carrier	1
	32	2100300	Screw	5
	33	3580090	Knob	2
	34	3600130	Frame	1
	35	3580180	Knob	2
	36	3600050	Accessories carrier	1
	37	2360760	Knob	1

UN_CE_1726-JQ

Model 1008 (RK)

Version:

Serial number:

Code: **25305**

10/09/2015

400 V - 50 Hz

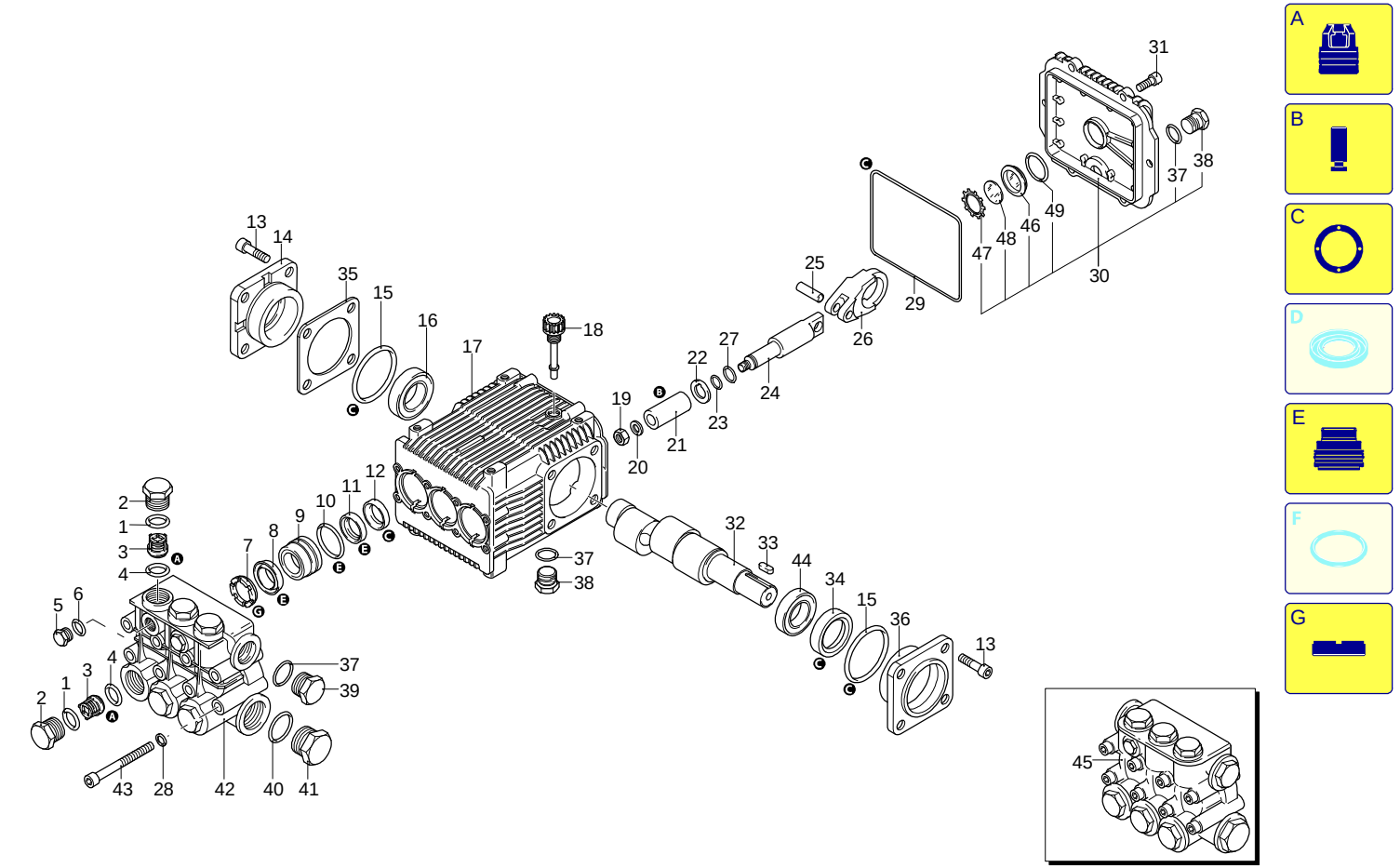

UN_CE_1728-JQ

Validity	Pos.	Code	Description	Q
	1	960160	O-ring	6
	2	960090	Plug	6
	3	1389051	Complete valve	6
	4	880830	O-ring	6
	5	880581	Plug	2
	6	820510	O-ring	2
	7	840320	Ring	3
	8	840330	Water seal	3
	9	1380160	Piston guide	3
	10	961240	O-ring	3
	11	840340	Water seal	3
	12	1383130	Ring	3
	13	850370	Screw	8
	14	1380050	Support	1
	15	640030	O-ring	2
	16	2280340	Bearing	1
	17	1382770	Pump body	1
	18	880130	Plug	1
	19	962010	Nut	3
	20	962000	Washer	3
	21	1382360	Piston	3
	22	1380950	Plate	3
	23	600180	O-ring	3
	24	1380920	Piston	3
	25	1380060	Pin	3
	26	1383050	Connecting-rod	3
	27	1080401	Ring	3
	28	1381850	Washer	8
	29	1780510	O-ring	1
	30	1789010	Cover	1
	31	1343510	Screw	6
	32	2280070	Shaft	1
	33	1380520	Key	1
	34	180340	Ring	1
	35	1380120	Shim 0.10 mm	1
	35	1380130	Shim 0.20 mm	1
	36	1380040	Support	1
	37	740290	O-ring	3
	38	1980740	Plug	2
	39	1980740	Plug	1
	40	180101	O-ring	1
	41	820361	Plug	1
	42	1380020	Head	1
	43	820150	Screw	8
	44	1383140	Bearing	1
	45	1389216	Head assembly	1
	46	1260250	Level gauge	1
	47	1260430	Ring	1
	48	1780690	Plate	1
	49	1140450	O-ring	1
	A	2864	Valve kit	1
	B	2759	Piston kit	1
	C	1855	Oil seal kit	1
	E	1888	Water seal kit	1
	G	1816	Support ring kit	1

Model 1008 (RK)

Version:

Serial number:

Code: **25305**

10/09/2015

400 V - 50 Hz

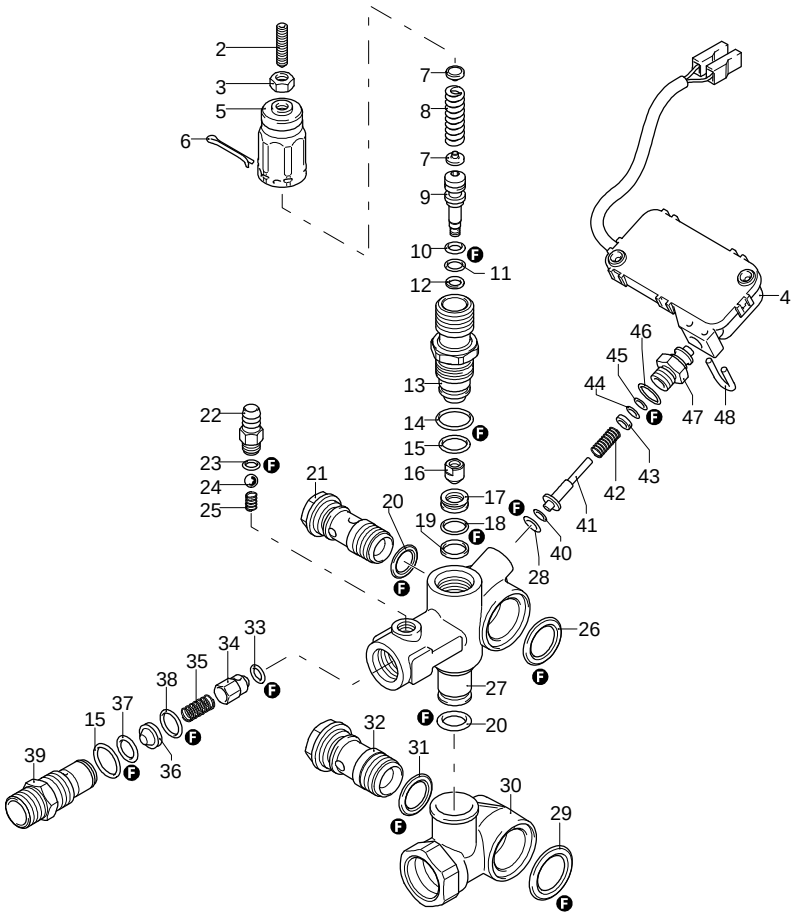

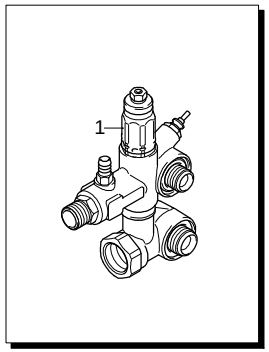

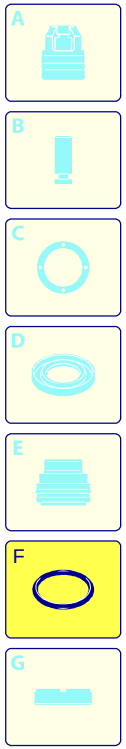

Validity	Pos.	Code	Description	Q
	1	25452	Complete valve	1
	2	2840970	Screw	1
	3	1060120	Nut	1
	4	2029752	TSS box assembly	1
	5	2500540	Insert	1
	6	2500550	Split pin	1
	7	1980220	Wobble plate	2
	8	2760410	Spring	1
	9	2760400	Piston	1
	10	2260100	O-ring	1
	11	660190	O-ring	1
	12	2760210	Ring	1
	13	2760570	Guide	1
	14	1200690	O-ring	1
	15	394280	O-ring	5
	16	2260070	Shutter	1
	17	2760980	Seat	1
	18	770140	O-ring	1
	19	2760640	Ring	1
	20	390080	O-ring	2
	21	1540272	Screw	1
	22	1982520	Hose tail	1
	23	480480	O-ring	1
	24	1250280	Ball	1
	25	1560520	Spring	1
	26	2260190	O-ring	1
	27	3740010	Valve body	1
	28	1120681	O-ring	1
	29	1540630	O-ring	1
	30	3740020	Body	1
	31	880270	O-ring	1
	32	2260420	Screw	1
	33	2101770	O-ring	1
	34	2760131	Shutter	1
	35	2760200	Spring	1
	36	2761410	Insert	1
	37	1470210	O-ring	1
	38	2760270	O-ring	1
	39	2760230	Fitting	1
	40	2260480	Ring	1
	41	2260470	Pin	1
	42	2260460	Spring	1
	43	2021650	Washer	1
	44	1260821	O-ring	1
	45	3740050	Ring	1
	46	600180	O-ring	1
	47	3740040	Fitting	1
	48	2022201	Fork	1
	F	42780	Gasket kit	1

UN_CE_1727-JQ

Model 1008 (RK)

Version:

Serial number:

Code: **25305**

10/09/2015

400 V - 50 Hz

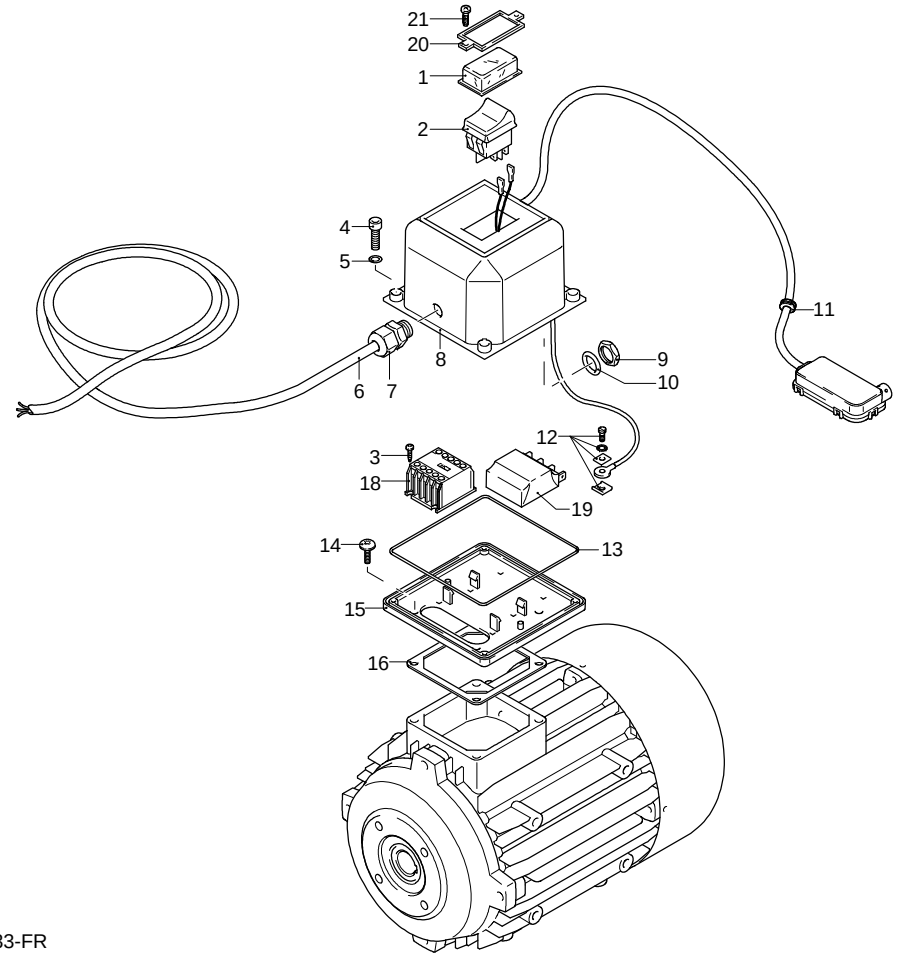

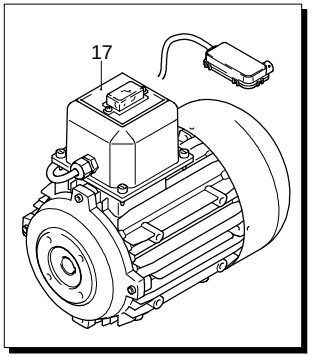

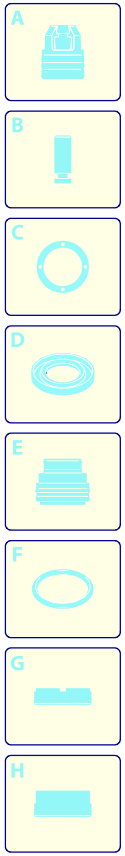

Validity	Pos.	Code	Description	Q
	1	1381980	Guard	1
	2	1682270	Switch	1
	3	1261570	Screw	4
	4	1261560	Screw	4
	5	1080190	O-ring	4
	6	1760640	Cable	1
	7	1382380	Cable gland	1
	8	1700930	Cover	1
	9	1700590	Nut	1
	10	880270	O-ring	1
	11	1462900	Gland	1
	12	1269100	Clamp	1
	13	1940410	O-ring	1
	14	1470130	Screw	4
	15	1700080	Plate	1
	16	50068	Gasket	1
	17	44795	Motor	1
	18	1700960	Mini-contactor	1
	19	2360590	Board	1
	20	1381940	Frame	1
	21	1261551	Screw	2

Model 1008 (RK)

Version:

Serial number:

Code: **25305**

10/09/2015

400 V - 50 Hz

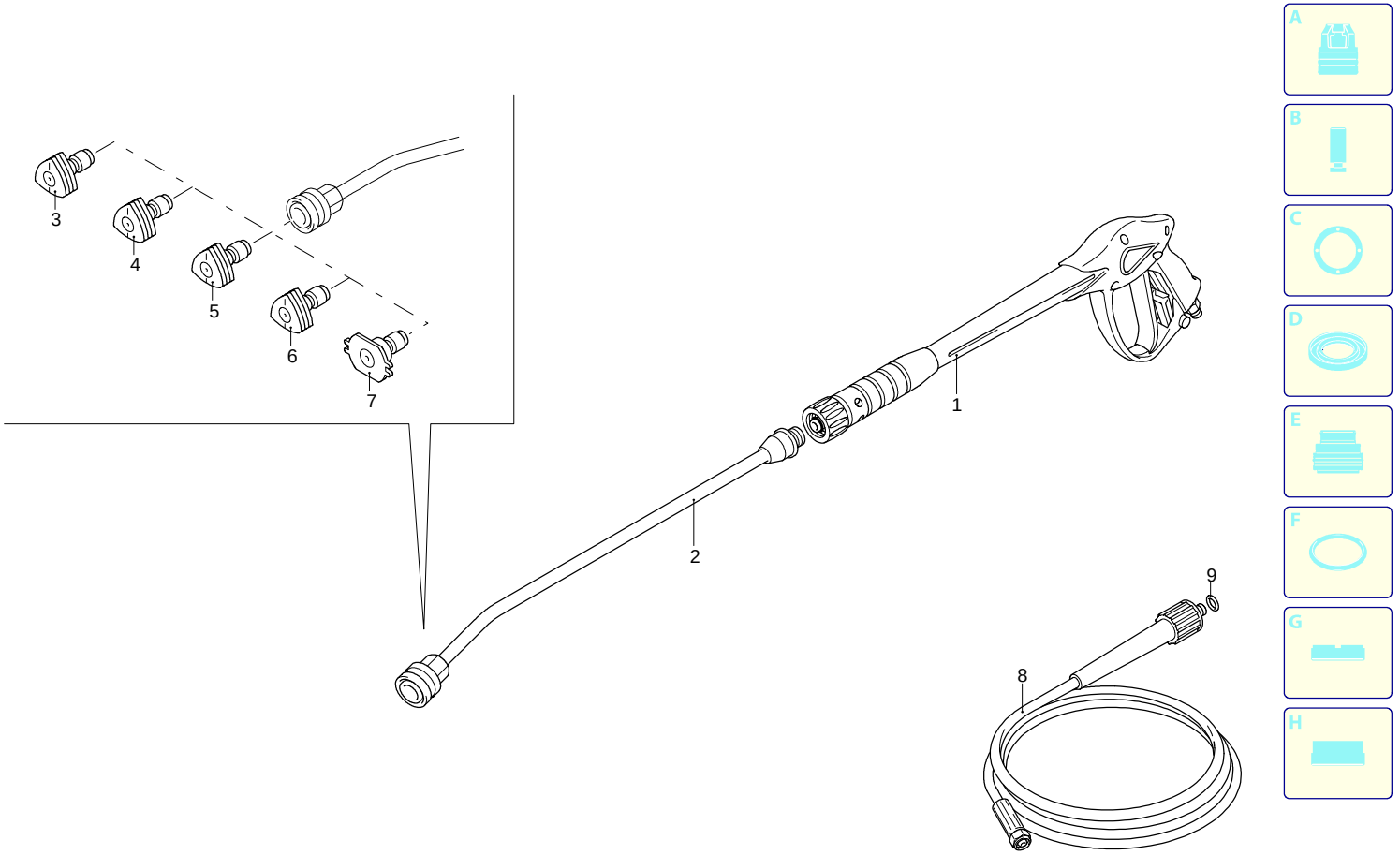

Validity	Pos.	Code	Description	Q
	1	41045	Gun	1
	2	3600650	Lance	1
	3	3600680	Nozzle (0°)	1
	4	3600690	Nozzle (15°)	1
	5	3600700	Nozzle (25°)	1
	6	3600710	Nozzle (40°)	1
	7	3600400	Nozzle (low pressure)	1
	8	1700980	High pressure hose	1
	9	2000770	O-ring	1

UN_CE_1452-CR