Model 1003

Version:

Serial number:

Code: **24385**

17/06/2014

230 V - 50 Hz | **schuko**

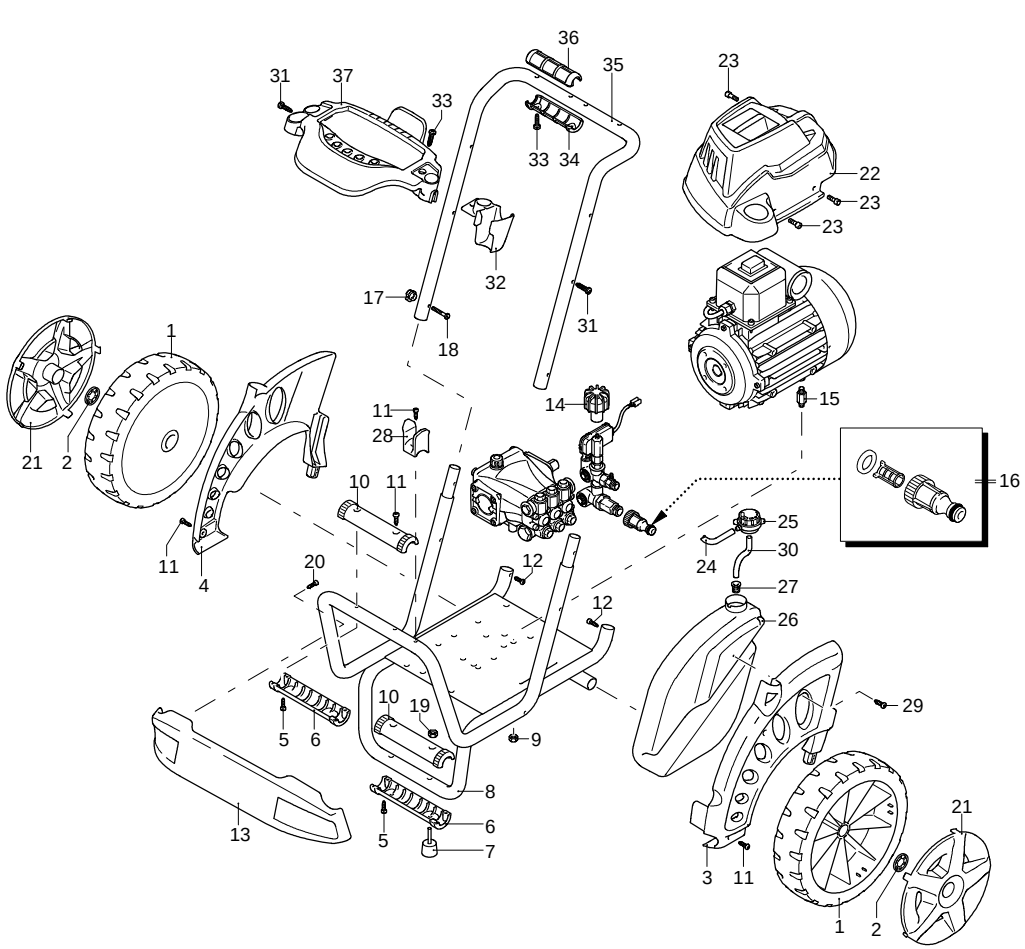

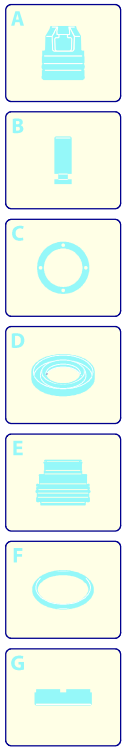

Validity	Pos.	Code	Description	Q
	1	3600140	Wheel	2
	2	3600180	Washer	2
	3	3600010	Guard	1
	4	3600020	Guard	1
	5	2000110	Screw	8
	6	3600040	Guard	2
	7	3600190	Vibration damper	2
	8	3600121	Frame	1
	9	380240	Nut	4
	10	3600200	Guard	2
	11	2060200	Screw	5
	12	2100300	Screw	2
	13	3600321	Guard	1
	14	2360760	Knob	1
	15	2360340	Stud bolt	4
	16	3082130	Water coupling kit	1
	17	50019	Knob	2
	18	50037	Screw	2
	19	1060120	Nut	2
	20	2021780	Screw	2
	21	3600031	Guard	2
	22	3600291	Casing	1
	23	850250	Screw	3
	24	3600410	Detergent hose	1
	25	42113	Plug assembly	1
	26	3600250	Tank	1
	27	2000230	Filter	1
	28	3600070	Accessories carrier	1
	29	2360360	Screw	1
	30	2500330	Detergent hose	1
	31	2060200	Screw	2
	32	3600060	Accessories carrier	1
	33	2100300	Screw	5
	34	3580090	Knob	2
	35	3600130	Frame	1
	36	3580180	Knob	2
	37	3600050	Accessories carrier	1

UN_CE_0891-MU

Model 1003

Version:

Serial number:

Code: **24385**

17/06/2014

230 V - 50 Hz | **schuko**

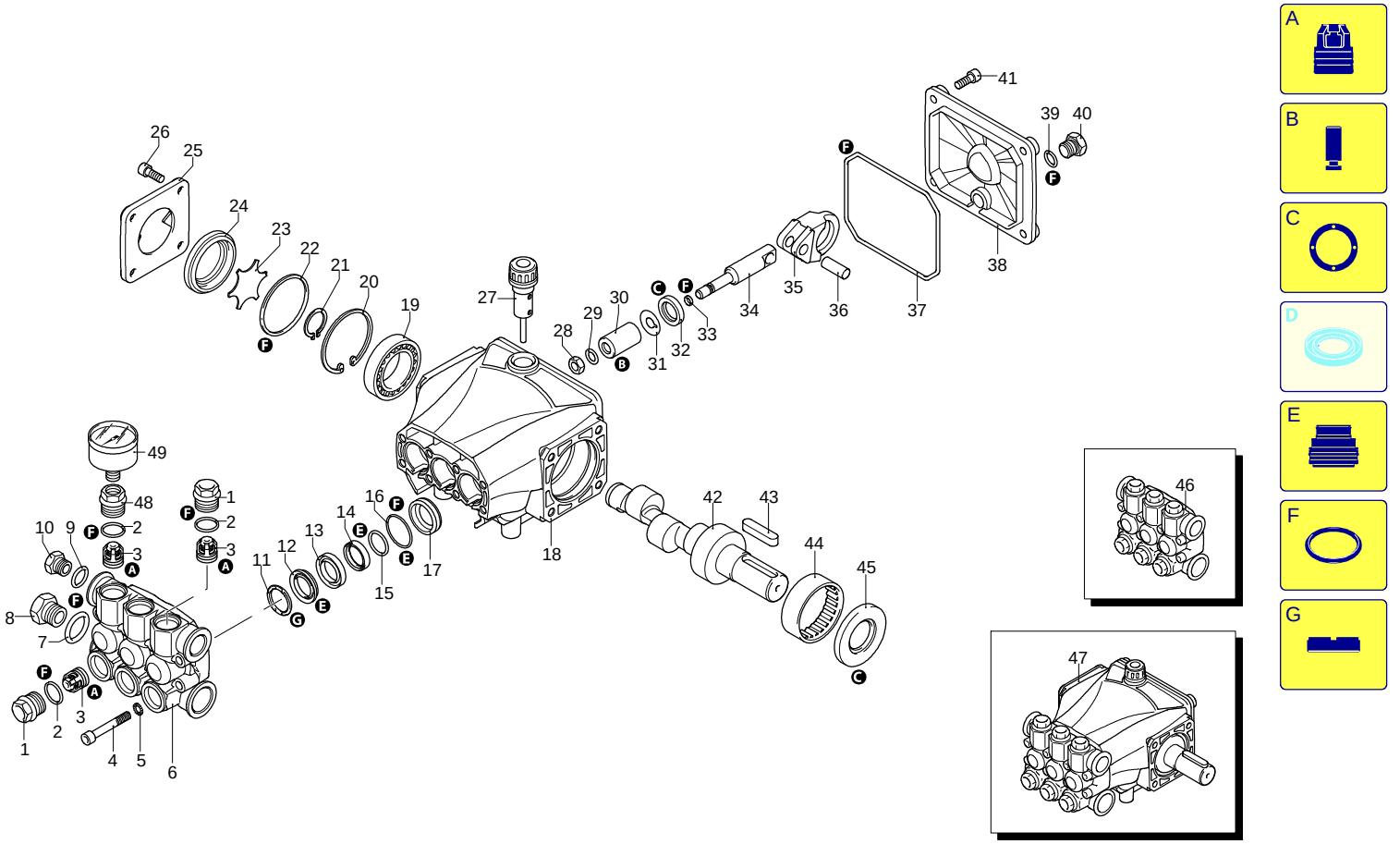

UN_CE_0724-DU

Validity	Pos.	Code	Description	Q
	1	3200110	Plug	5
	2	1200690	O-ring	6
	3	2769050	Complete valve	6
	4	800410	Screw	8
	5	1381550	Washer	8
	6	3200020	Head	1
	7	180101	O-ring	1
	8	820361	Plug	1
	9	740290	O-ring	1
	10	1980740	Plug	1
	11	1780140	Ring	3
	12	1780720	Water seal	3
	13	3200130	Piston guide	3
	14	3200142	Gasket	3
	15	3200260	Ring	3
	16	770590	O-ring	3
	17	3200120	Piston guide	3
	18	3200010	Pump body	1
	19	1780490	Bearing	1
	20	1260790	Ring	1
	21	1780550	Ring	1
	22	395081	O-ring	1
	23	3200090	Plate	1
	24	3200080	Level gauge	1
	25	3200070	Support	1
	26	1200430	Screw	4
	27	880130	Plug	1
	28	1260110	Nut	3
	29	1260100	Washer	3
	30	1260210	Piston	3
	31	1260091	Plate	3
	32	1260460	Oil seal	3
	33	480480	O-ring	3
	34	3200060	Piston	3
	35	3200040	Connecting-rod	3
	36	1780050	Pin	3
	37	2760280	O-ring	1
	38	3200030	Cover	1
	39	820510	O-ring	1
	40	880581	Plug	1
	41	3200220	Screw	4
	42	3200300	Shaft	1
	43	3200230	Key	1
	44	1321190	Bearing	1
	45	1260750	Ring	1
	46	3209200	Head assembly	1
	47	23384	Pump assembly	1
	48	3200430	Plug	1
	49	40786	Pressure gauge	1
	A	2186	Valve kit	1
	B	42467	Piston kit	1
	C	42468	Oil seal kit	1
	E	42469	Water seal kit	1
	F	42470	Gasket kit	1
	G	2745	Support ring kit	1

Model 1003

Version:

Serial number:

Code: **24385**

17/06/2014

230 V - 50 Hz | **schuko**

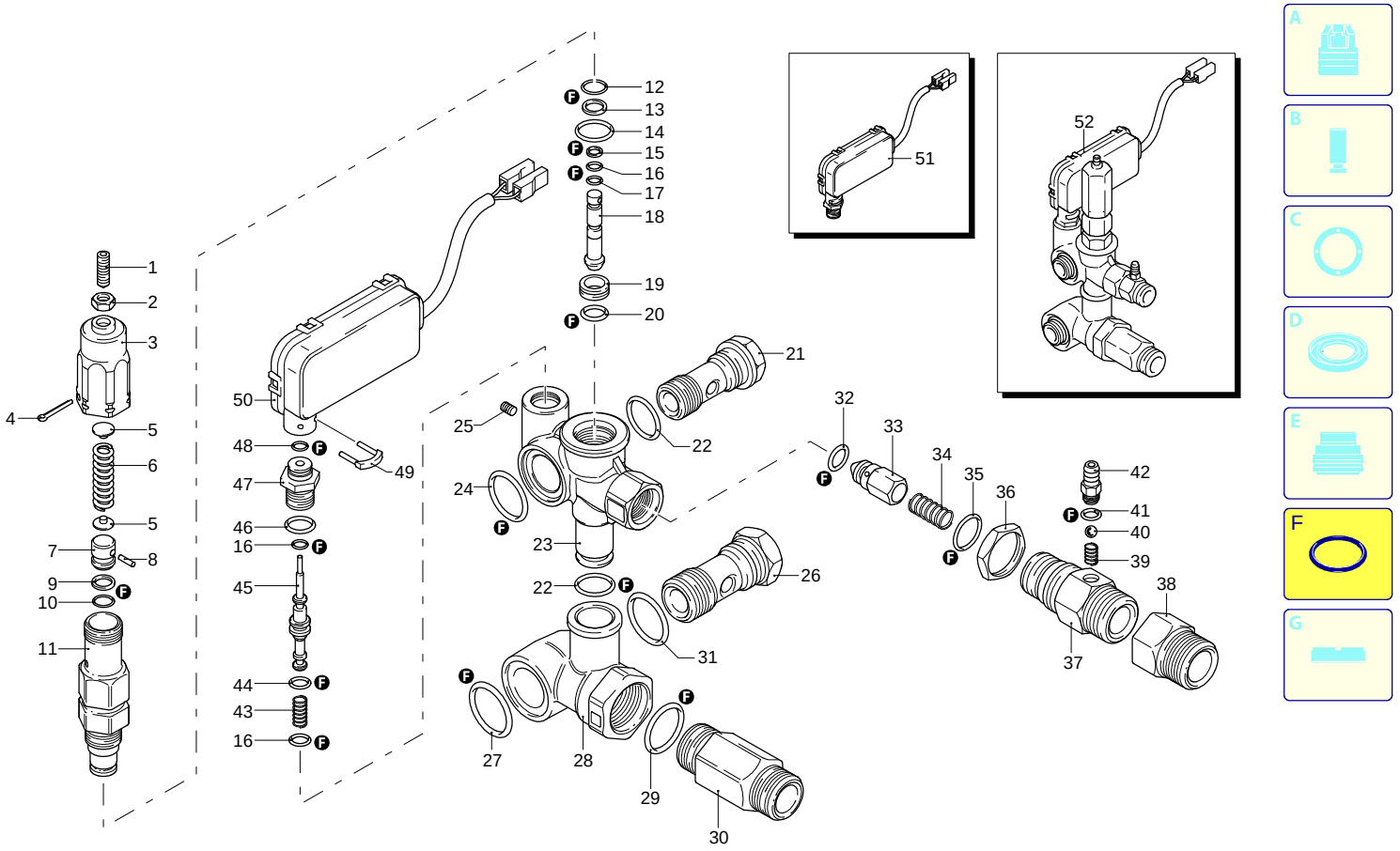

UN_CE_0727-DU

Validity	Pos.	Code	Description	Q
	1	392840	Screw	1
	2	1980300	Nut	1
	3	2500540	Insert	1
	4	2500550	Split pin	1
	5	1980220	Wobble plate	2
	6	1271070	Spring	1
	7	1080041	Piston	1
	8	1080070	Pin	1
	9	1080401	Ring	1
	10	1080250	O-ring	1
	11	1980210	Piston guide	1
	12	740290	O-ring	1
	13	800560	O-ring	1
	14	880830	O-ring	1
	15	1271170	Ring	1
	16	1080192	O-ring	3
	17	1120681	O-ring	1
	18	1271160	Piston	1
	19	2460420	Seat	1
	20	1080250	O-ring	1
	21	1540272	Screw	1
	22	390080	O-ring	2
	23	1540660	Valve body	1
	24	1140450	O-ring	1
	25	1981190	Screw	1
	26	2260420	Screw	1
	27	1540630	O-ring	1
	28	1540280	Suction fitting	1
	29	480440	O-ring	1
	30	1560900	Fitting	1
	31	880270	O-ring	1
	32	1460430	O-ring	1
	33	1540170	Shutter	1
	34	1080091	Spring	1
	35	394280	O-ring	1
	36	1540300	Nut	1
	37	1540570	Fitting	1
	38	1123960	Fitting	1
	39	1560520	Spring	1
	40	1250280	Ball	1
	41	480480	O-ring	1
	42	1560490	Hose tail	1
	43	1981320	Spring	1
	44	660191	O-ring	1
	45	1540881	Piston	1
	46	880840	O-ring	1
	47	1540870	Plug	1
	48	1260820	O-ring	1
	49	2022201	Fork	1
	50	2029753	TSS box assembly	1
	51	42990	TSS kit	1
	52	25434	Complete valve	1
	F	42451	Gasket kit	1

Model 1003

Version:

Serial number:

Code: **24385**

17/06/2014

230 V - 50 Hz | **schuko**

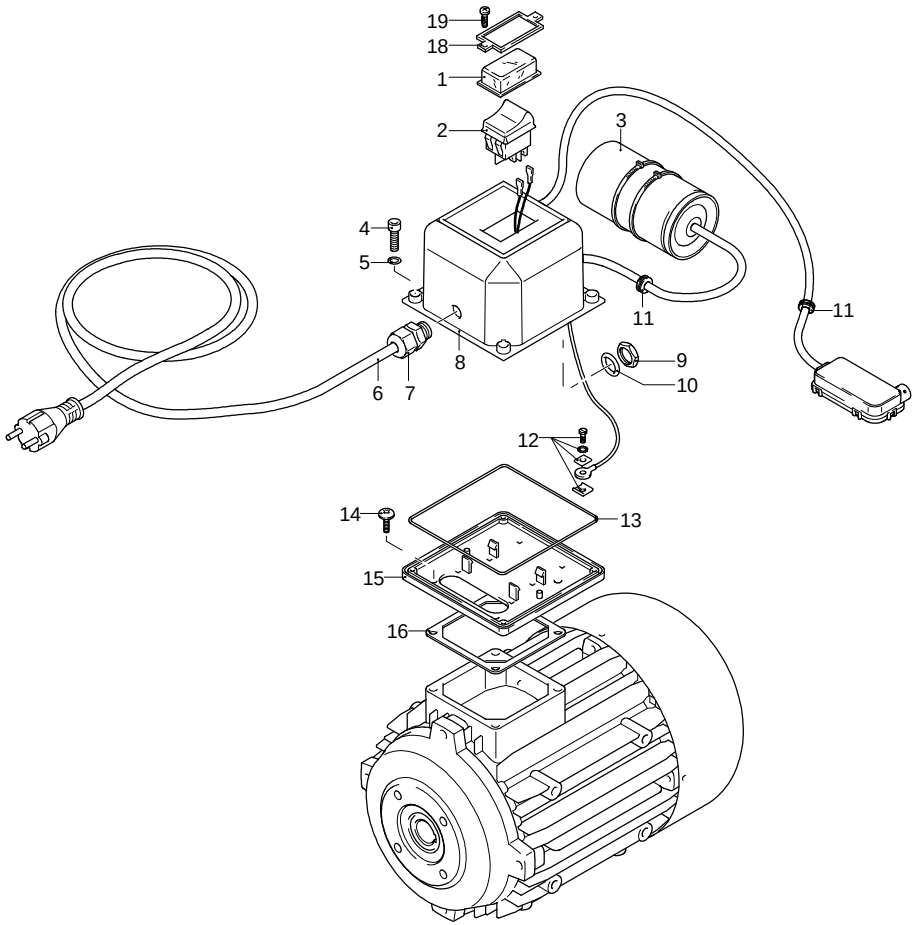

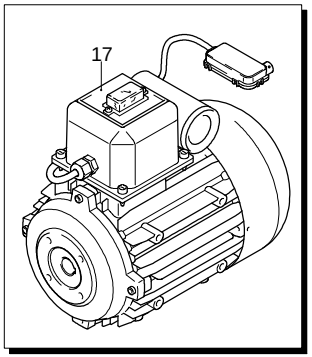

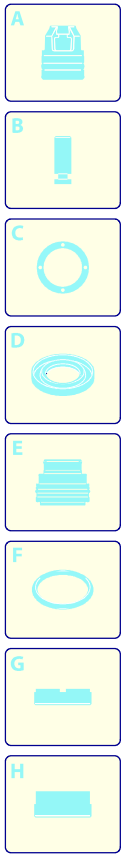

Validity	Pos.	Code	Description	Q
	1	1391980		1
	2	1682270	Switch	1
	3	51182	Capacitor	1
	4	1261560	Screw	4
	5	1080190	O-ring	4
	6	1760450	Cable	1
	7	1382380	Cable gland	1
	8	1701070	Box	1
	9	1700590	Nut	1
	10	880270	O-ring	1
	11	2021480	Gland	2
	12	1269100	Clamp	1
	13	1940410	O-ring	1
	14	1470130	Screw	4
	15	1700080	Plate	1
	16	50068	Gasket	1
	17	44510	Motor	1
	18	1381940	Frame	1
	19	1261551	Screw	2

UN_CE_0726-FR

Model 1003

Version:

Serial number:

Code: **24385**

17/06/2014

230 V - 50 Hz | **schuko**

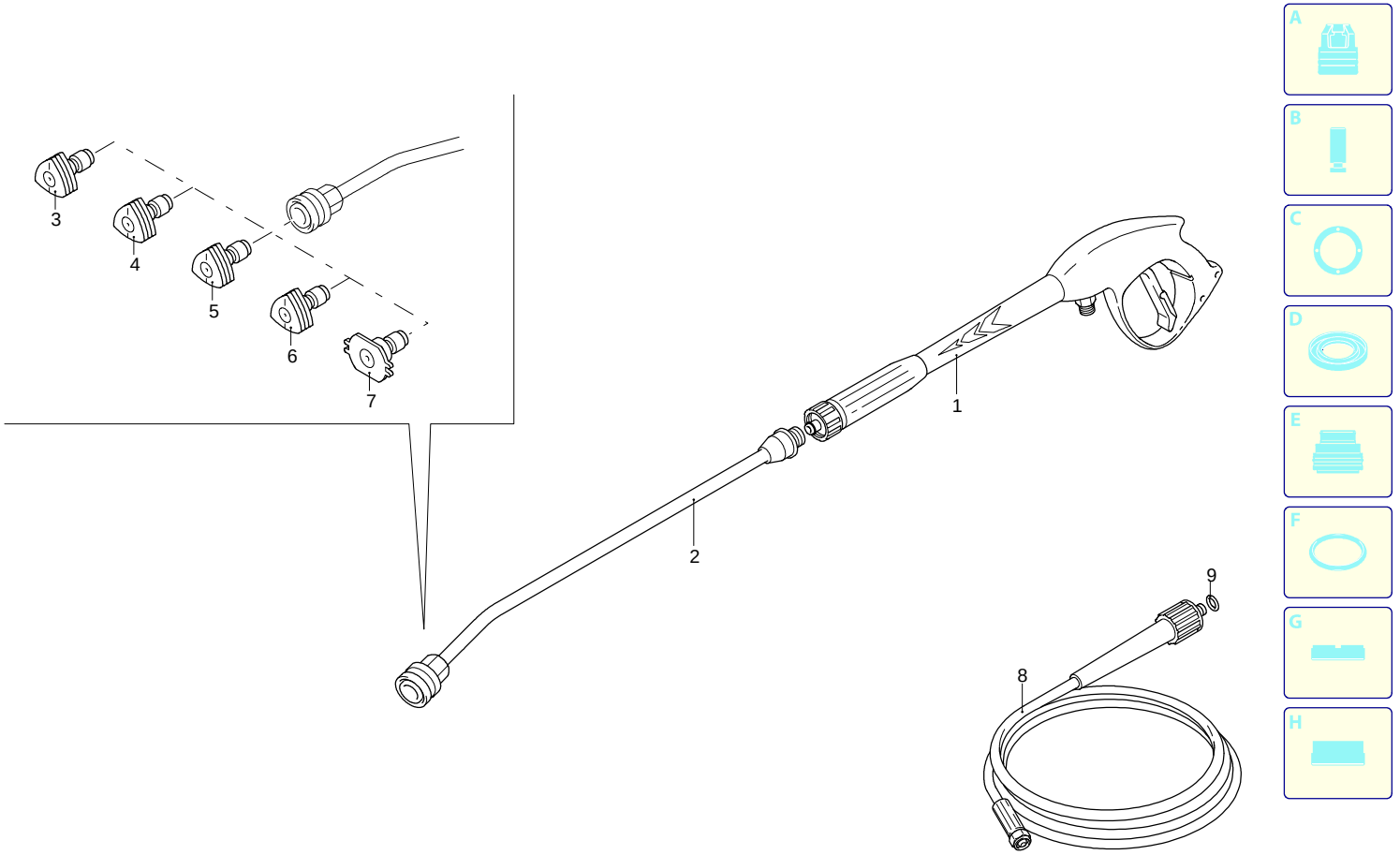

Validity	Pos.	Code	Description	Q
	1	40925	Gun	1
	2	3600650	Lance	1
	3	3600350	Nozzle (0°)	1
	4	3600360	Nozzle (15°)	1
	5	3600370	Nozzle (25°)	1
	6	3600380	Nozzle (40°)	1
	7	3600400	Nozzle (low pressure)	1
	8	1271960	High pressure hose	1
	9	2000770	O-ring	1

UN_CE_1449-CR