# Model 1001

Version:

Serial number:

Code: **24384**

**26/03/2014**

**230 V - 50 Hz** | **schuko**

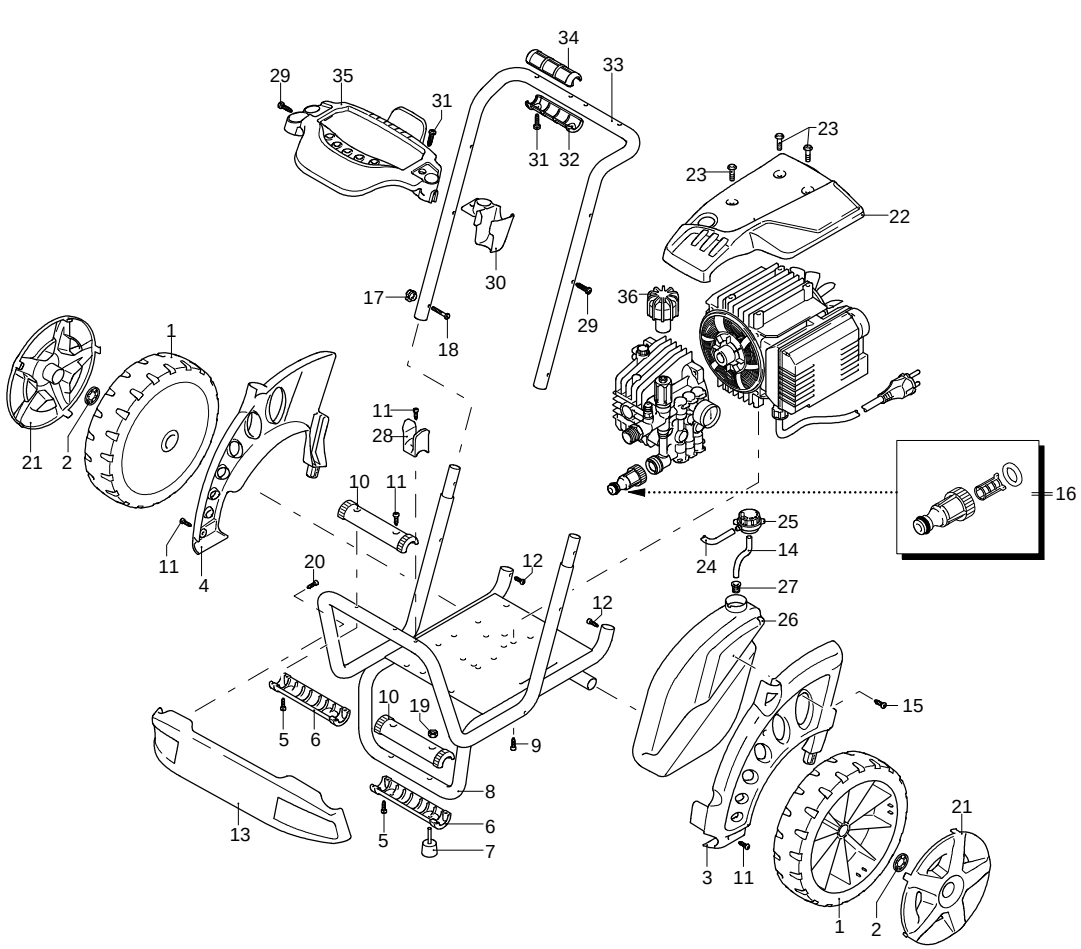


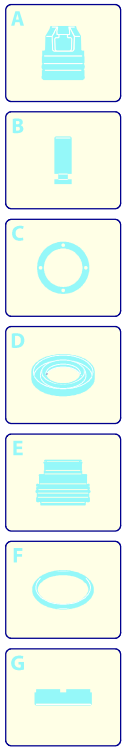


| Validity | Pos. | Code | Description | Q |
|---|---|---|---|---|
| | 1 | 3600140 | Wheel | 2 |
| | 2 | 3600180 | Washer | 2 |
| | 3 | 3600010 | Guard | 1 |
| | 4 | 3600020 | Guard | 1 |
| | 5 | 2000110 | Screw | 8 |
| | 6 | 3600040 | Guard | 2 |
| | 7 | 3600190 | Vibration damper | 2 |
| | 8 | 3600121 | Frame | 1 |
| | 9 | 320350 | Screw | 4 |
| | 10 | 3600200 | Guard | 2 |
| | 11 | 2060200 | Screw | 5 |
| | 12 | 2100300 | Screw | 2 |
| | 13 | 3600321 | Guard | 1 |
| | 14 | 2500330 | Detergent hose | 1 |
| | 15 | 2360360 | Screw | 1 |
| | 16 | 3082130 | Water coupling kit | 1 |
| | 17 | 50019 | Knob | 2 |
| | 18 | 50037 | Screw | 2 |
| | 19 | 1060120 | Nut | 2 |
| | 20 | 2021780 | Screw | 2 |
| | 21 | 3600031 | Guard | 2 |
| | 22 | 3600281 | Casing | 1 |
| | 23 | 3600330 | Screw | 4 |
| | 24 | 1270960 | Detergent hose | 1 |
| | 25 | 42113 | Plug assembly | 1 |
| | 26 | 3600250 | Tank | 1 |
| | 27 | 2000230 | Filter | 1 |
| | 28 | 3600070 | Accessories carrier | 1 |
| | 29 | 2060200 | Screw | 2 |
| | 30 | 3600060 | Accessories carrier | 1 |
| | 31 | 2100300 | Screw | 5 |
| | 32 | 3580090 | Knob | 2 |
| | 33 | 3600130 | Frame | 1 |
| | 34 | 3580180 | Knob | 2 |
| | 35 | 3600050 | Accessories carrier | 1 |
| | 36 | 2360760 | Knob | 1 |

UN_CE_0889-TA

# Model 1001

Version:

Serial number:

Code: **24384**

**26/03/2014**

**230 V - 50 Hz** | **schuko**

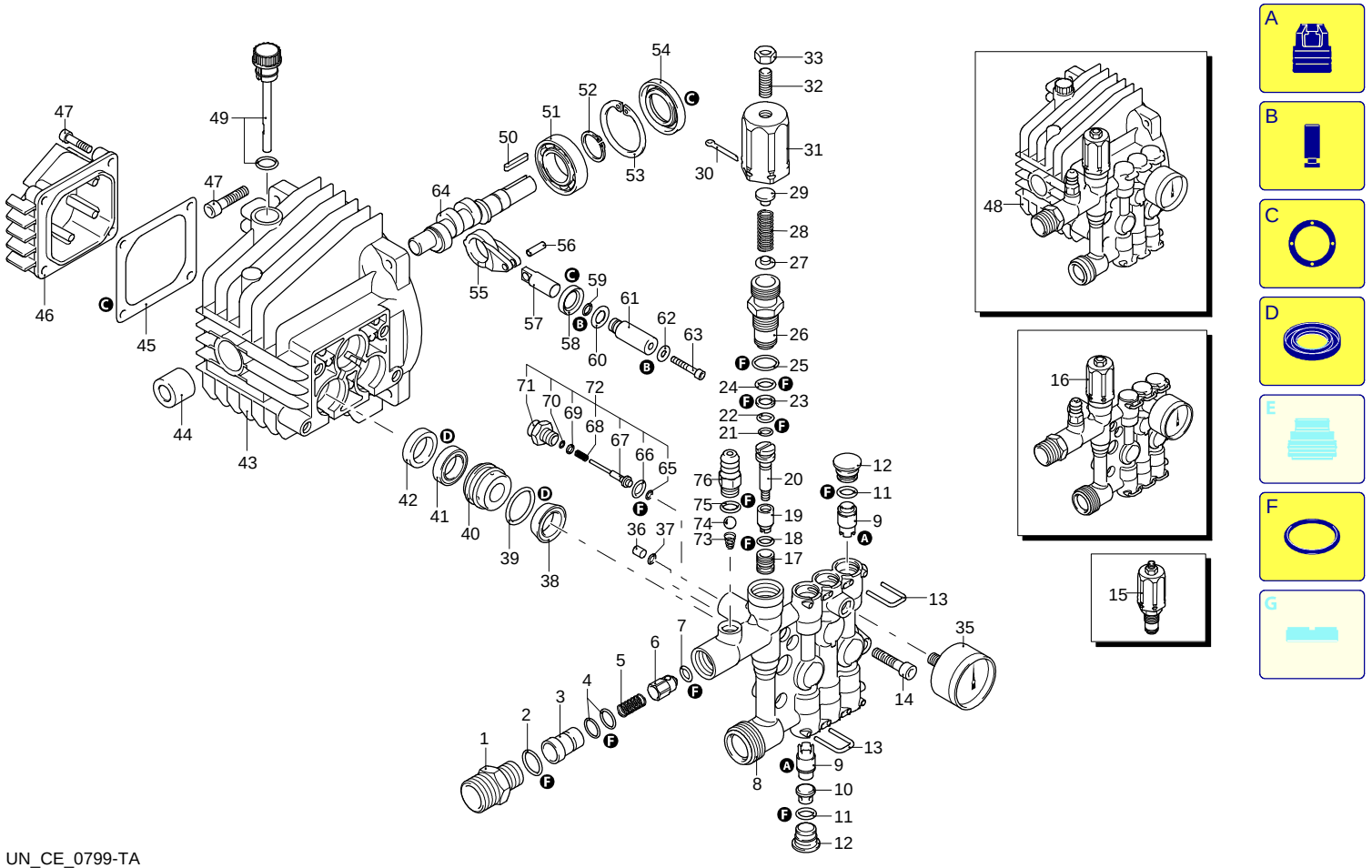


| Validity | Pos. | Code | Description | Q |
|---|---|---|---|---|
| | 1 | 2900120 | Fitting | 1 |
| | 2 | 740290 | O-ring | 1 |
| | 3 | 2901060 | Injector | 1 |
| | 4 | 800560 | O-ring | 2 |
| | 5 | 1080091 | Spring | 1 |
| | 6 | 2901070 | Shutter | 1 |
| | 7 | 1460430 | O-ring | 1 |
| | 8 | 1344850 | Head | 1 |
| | 9 | 1349055 | Valve | 6 |
| | 10 | 1344770 | Spacer | 3 |
| | 11 | 1465720 | O-ring | 6 |
| | 12 | 1344800 | Plug | 6 |
| | 13 | 1344790 | Fork | 6 |
| | 14 | 850850 | Screw | 4 |
| | 15 | 42579 | Valve kit adjustment | 1 |
| | 16 | 1349203 | Head assembly | 1 |
| | 17 | 1342701 | Seat | 1 |
| | 18 | 600180 | O-ring | 1 |
| | 19 | 1460151 | Piston | 1 |
| | 20 | 2021900 | Piston | 1 |
| | 21 | 1080190 | O-ring | 1 |
| | 22 | 600180 | O-ring | 1 |
| | 23 | 1080401 | Ring | 1 |
| | 24 | 820510 | O-ring | 1 |
| | 25 | 740290 | O-ring | 1 |
| | 26 | 1344870 | Piston guide | 1 |
| | 27 | 1343450 | Wobble plate | 1 |
| | 28 | 1460190 | Spring | 1 |
| | 29 | 1980220 | Wobble plate | 1 |
| | 30 | 2500550 | Split pin | 1 |
| | 31 | 1344881 | Insert | 1 |
| | 32 | 1980740 | Plug | 1 |
| | 33 | 1060120 | Nut | 1 |
| | 35 | 3233 | Pressure gauge | 1 |
| | 36 | 1344890 | Plug | 1 |
| | 37 | 2560870 | O-ring | 1 |
| | 38 | 2460180 | Water seal | 3 |
| | 39 | 770260 | O-ring | 3 |
| | 40 | 1344750 | Piston guide | 3 |
| | 41 | 1260440 | Water seal | 3 |
| | 42 | 1344760 | Ring | 3 |
| | 43 | 1344050 | Pump body | 1 |
| | 44 | 1260050 | Bushing | 1 |
| | 45 | 1040710 | O-ring | 1 |
| | 46 | 1344060 | Cover | 1 |
| | 47 | 1260780 | Screw | 8 |
| | 48 | 1349281 | Pump assembly | 1 |
| | 49 | 1349000 | Plug | 1 |
| | 50 | 880111 | Key | 1 |
| | 51 | 1341070 | Bearing | 1 |
| | 52 | 480890 | Ring | 1 |
| | 53 | 111120 | Ring | 1 |
| | 54 | 1341080 | Ring | 1 |
| | 55 | 1340060 | Connecting-rod | 3 |
| | 56 | 1340080 | Pin | 3 |
| | 57 | 1340070 | Piston | 3 |
| | 58 | 1260460 | Oil seal | 3 |
| | 59 | 600180 | O-ring | 3 |
| | 60 | 1341010 | Plate | 3 |
| | 61 | 1342740 | Piston | 3 |
| | 62 | 1341020 | Washer | 3 |
| | 63 | 850670 | Screw | 3 |

UN_CE_0799-TA

# Model 1001

Version:

Serial number:

Code: **24384**

**26/03/2014**

**230 V - 50 Hz** | **schuko**

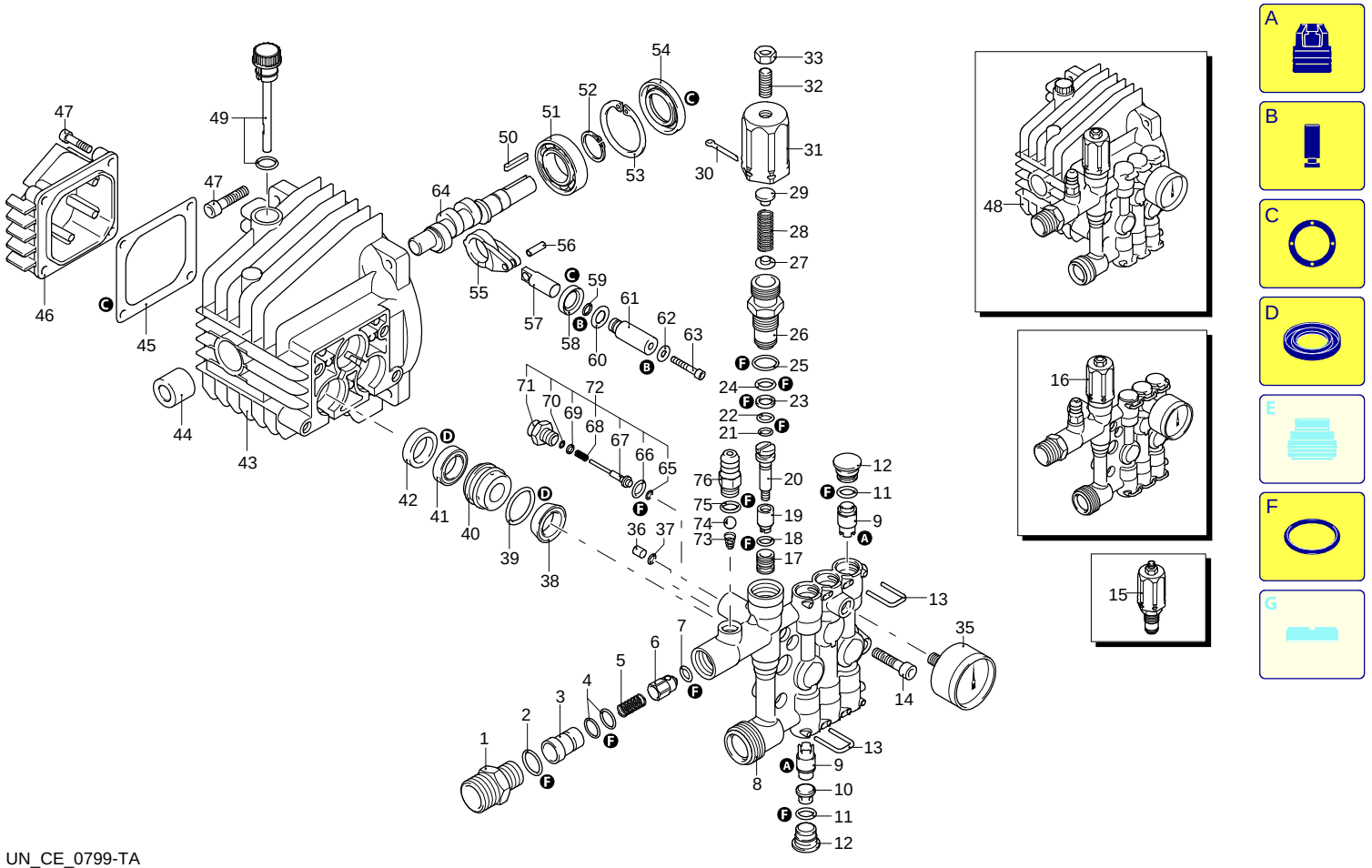


| Validity | Pos. | Code | Description | Q |
|---|---|---|---|---|
| | 64 | 1340170 | Shaft | 1 |
| | 65 | 1120680 | O-ring | 1 |
| | 66 | 600180 | O-ring | 1 |
| | 67 | 2022040 | Pin | 1 |
| | 68 | 2021630 | Spring | 1 |
| | 69 | 2021650 | Washer | 1 |
| | 70 | 1260820 | O-ring | 1 |
| | 71 | 1344830 | Fitting | 1 |
| | 72 | 42580 | TSS Retrofit kit | 1 |
| | 73 | 1560520 | Spring | 1 |
| | 74 | 1250280 | Ball | 1 |
| | 75 | 480480 | O-ring | 1 |
| | 76 | 1982520 | Hose tail | 1 |
| | A | 42566 | Valve kit | 1 |
| | B | 2623 | Piston kit | 1 |
| | C | 1876 | Oil seal kit | 1 |
| | D | 42567 | Water seal kit | 1 |
| | F | 42568 | Gasket kit | 1 |

UN_CE_0799-TA

# Model 1001

Version:

Serial number:

Code: **24384**

**26/03/2014**

**230 V - 50 Hz** | **schuko**

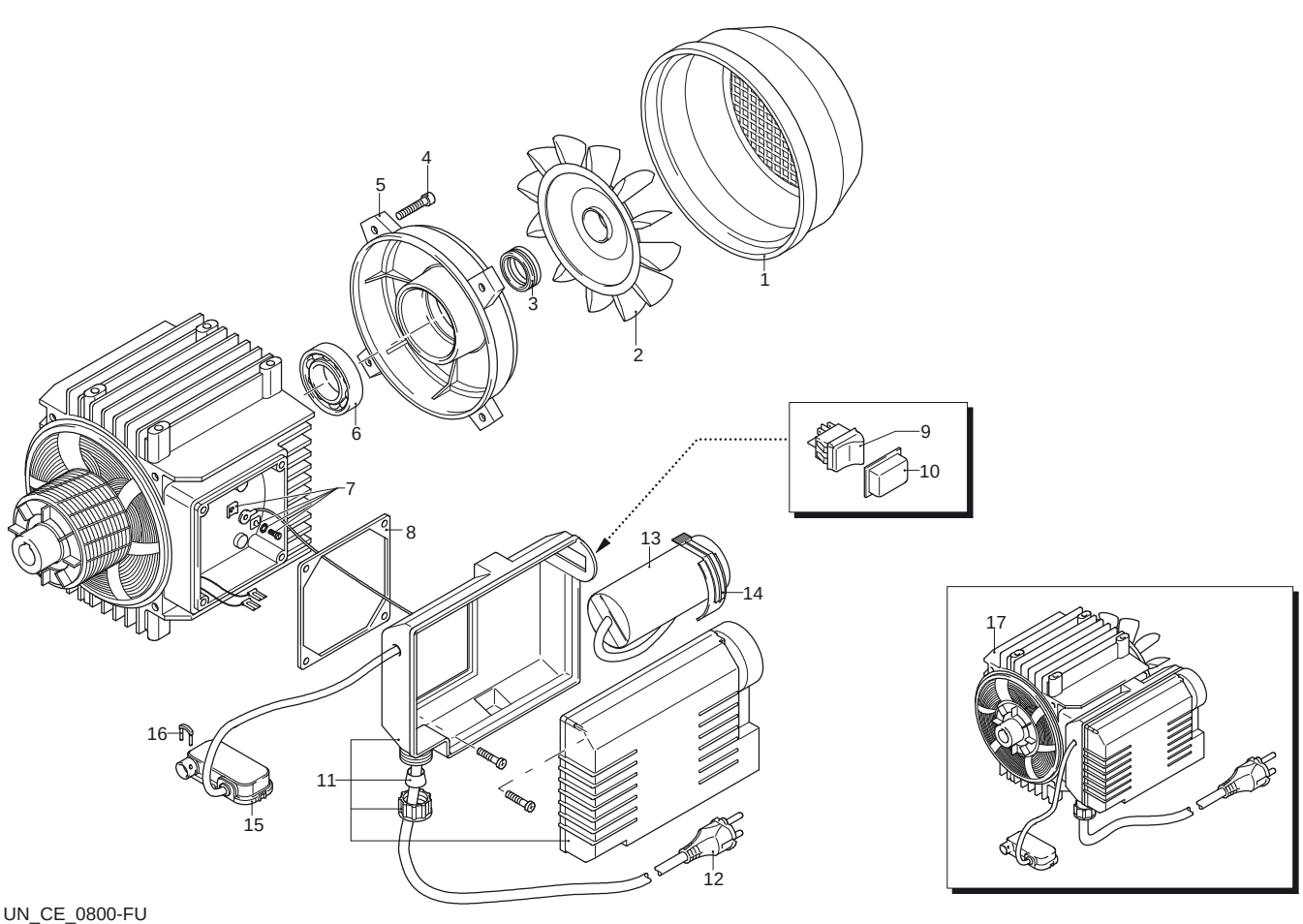


UN_CE_0800-FU

| Validity | Pos. | Code | Description | Q |
|---|---|---|---|---|
| | 1 | 1342040 | Fan cowling | 1 |
| | 2 | 1260300 | Fan | 1 |
| | 3 | 1340350 | Seal | 1 |
| | 4 | 1260760 | Screw | 1 |
| | 5 | 1340320 | Shield | 1 |
| | 6 | 1340340 | Bearing | 1 |
| | 7 | 1269100 | Clamp | 1 |
| | 8 | 1340780 | Gasket | 1 |
| | 9 | 1682270 | Switch | 1 |
| | 10 | 2102600 | Guard | 1 |
| | 11 | 1342261 | Box | 1 |
| | 12 | 1760450 | Cable | 1 |
| | 13 | 1263520 | Capacitor | 1 |
| | 14 | 1342080 | Clamp | 1 |
| | 15 | 2029752 | TSS box assembly | 1 |
| | 16 | 2022201 | Fork | 1 |
| | 17 | 44480 | Motor | 1 |

# Model 1001

Version:

Serial number:

Code: **24384**

**26/03/2014**

**230 V - 50 Hz** | **schuko**

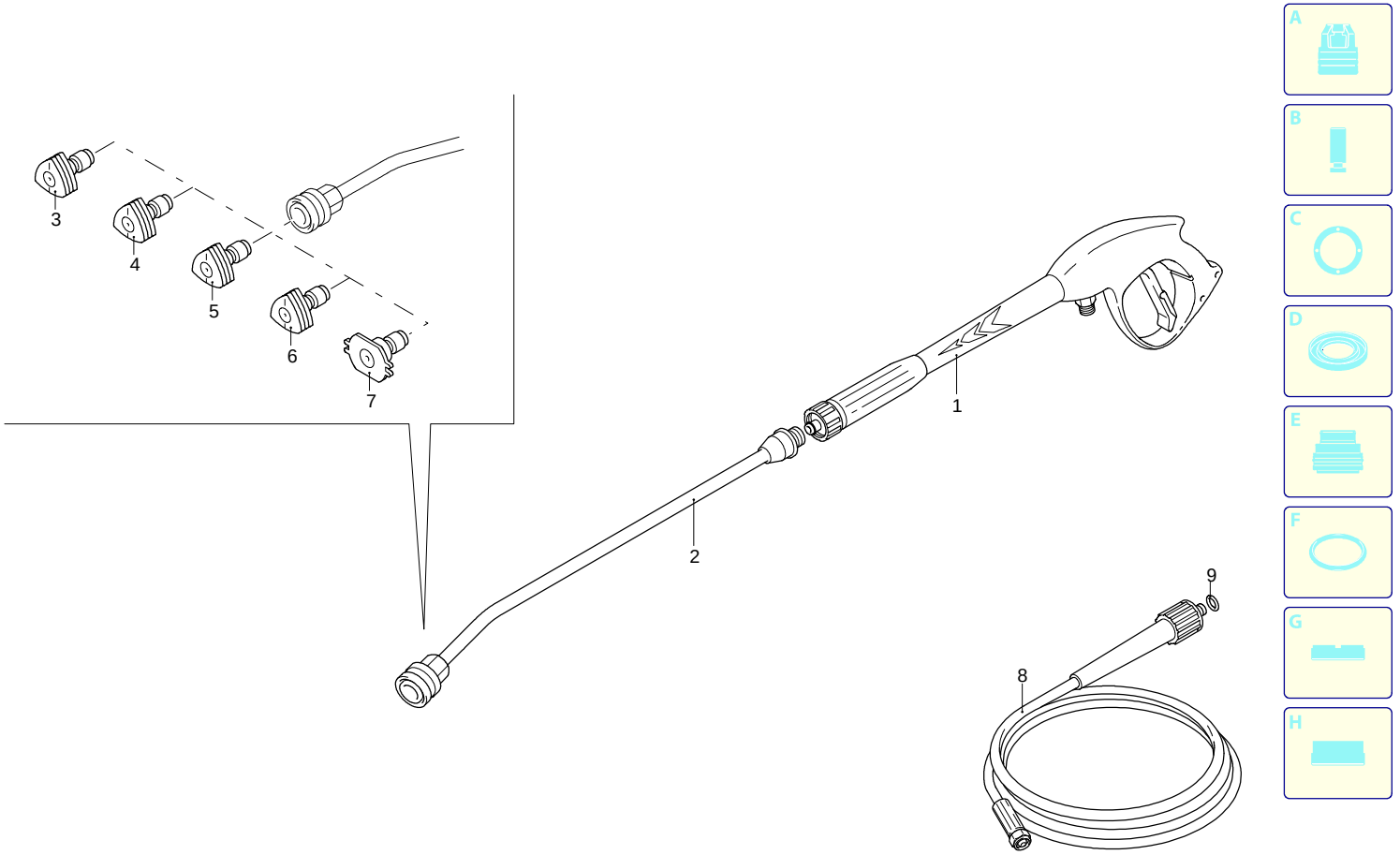


| Validity | Pos. | Code | Description | Q |
|---|---|---|---|---|
| | 1 | 40925 | Gun | 1 |
| | 2 | 3600650 | Lance | 1 |
| | 3 | 3600440 | Nozzle (0°) | 1 |
| | 4 | 3600450 | Nozzle (15°) | 1 |
| | 5 | 3600460 | Nozzle (25°) | 1 |
| | 6 | 3600470 | Nozzle (40°) | 1 |
| | 7 | 3600400 | Nozzle (low pressure) | 1 |
| | 8 | 3600620 | High pressure hose | 1 |
| | 9 | 2000770 | O-ring | 1 |

UN_CE_1449-CR