Versión:

Validez	Pos.	Código	Denominació



Model 1001 RLW

Version:

Serial number:

Code: **24388**

01/07/2016

230 V - 50 Hz | **schuko**

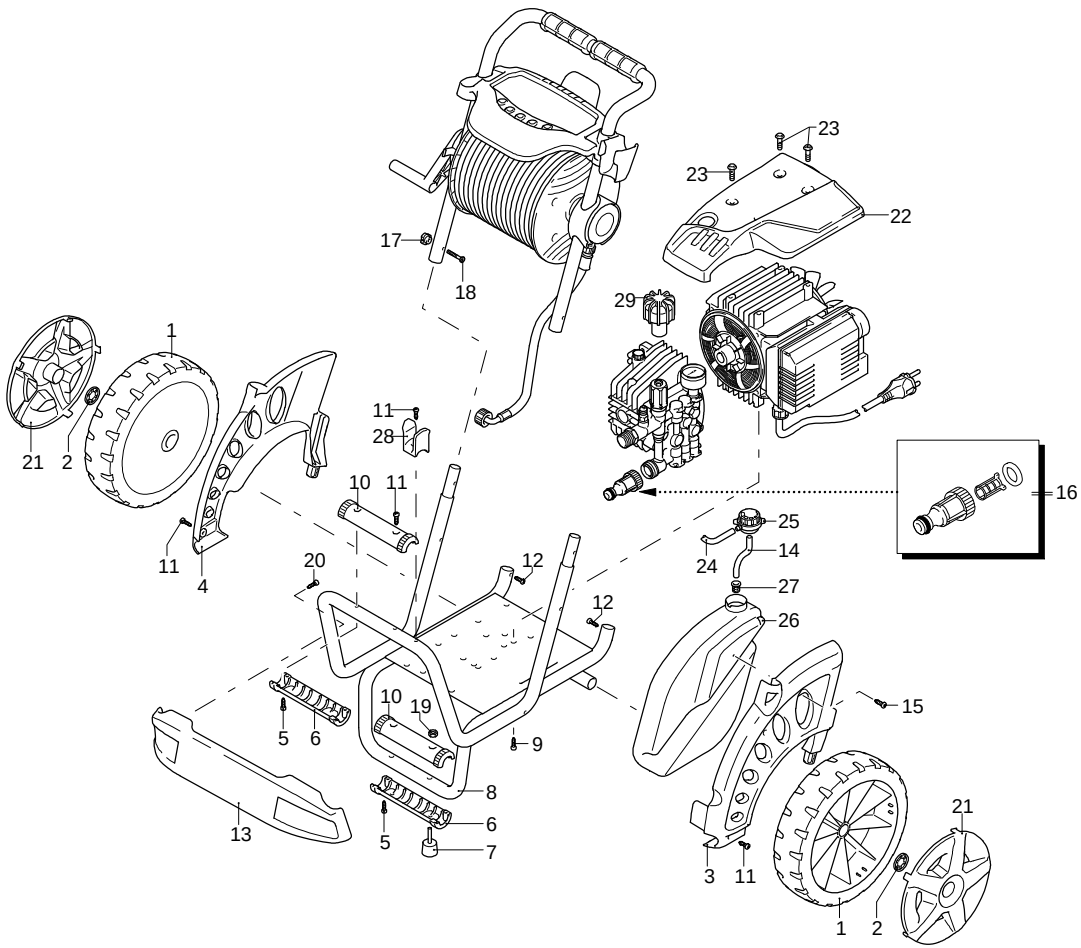

Validity	Pos.	Code	Description	Q
	1	3600140	Wheel	2
	2	3600180	Washer	2
	3	3600010	Guard	1
	4	3600020	Guard	1
	5	2000110	Screw	8
	6	3600040	Guard	2
	7	3600190	Vibration damper	2
	8	3600121	Frame	1
	9	320350	Screw	4
	10	3600200	Guard	2
	11	2060200	Screw	5
	12	2100300	Screw	2
	13	3600321	Guard	1
	14	2500330	Detergent hose	1
	15	2360360	Screw	1
	16	3082130	Water coupling kit	1
	17	50019	Knob	2
	18	50037	Screw	2
	19	1060120	Nut	2
	20	2021780	Screw	2
	21	3600031	Guard	2
	22	3600281	Casing	1
	23	3600330	Screw	4
	24	1270960	Detergent hose	1
	25	42113	Plug assembly	1
	26	3600250	Tank	1
	27	2000230	Filter	1
	28	3600070	Accessories carrier	1
	29	2360760	Knob	1

UN_CE_0798-AP

Model 1001 RLW

Version:

Serial number:

Code: **24388**

01/07/2016

230 V - 50 Hz | **schuko**

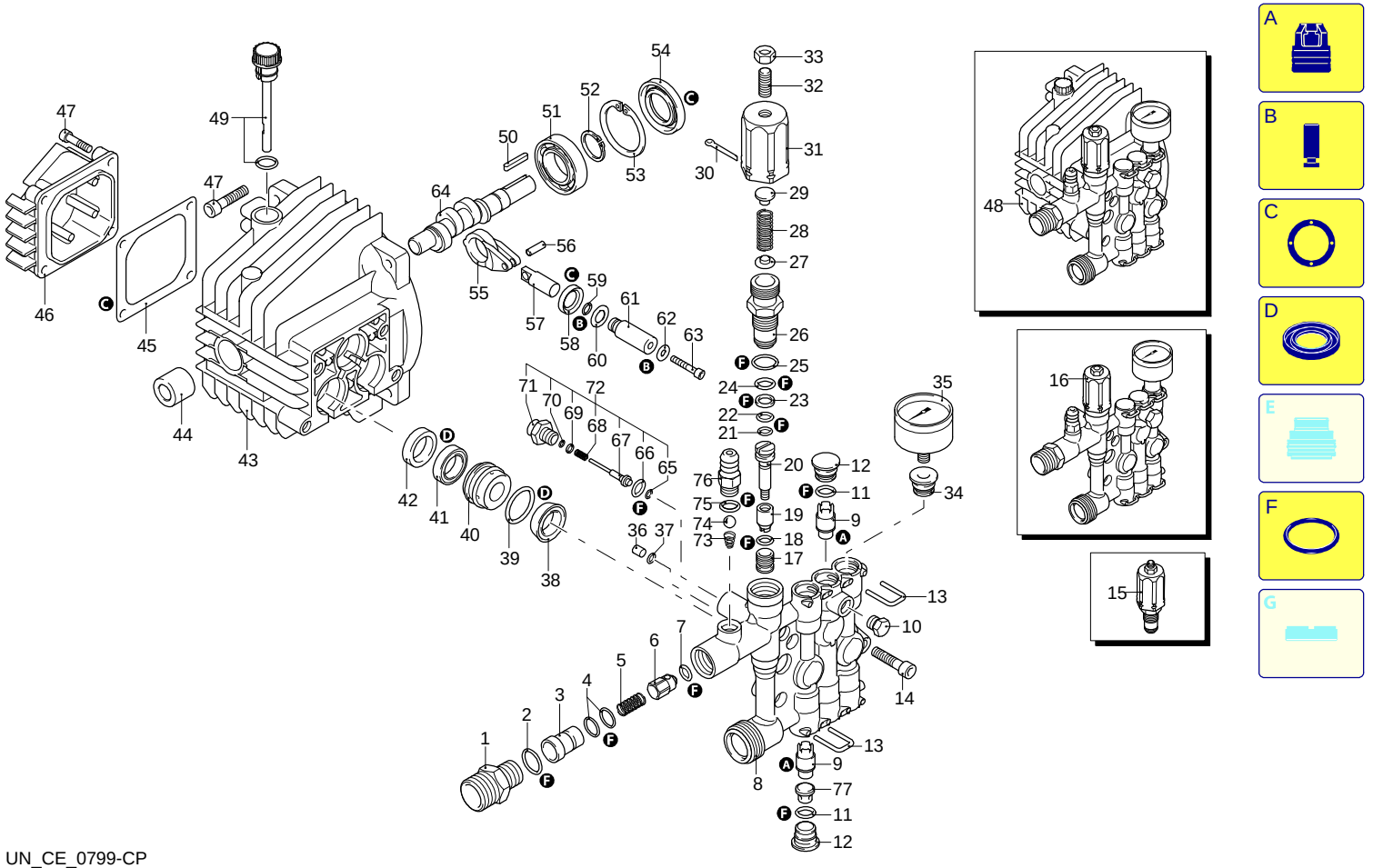

UN_CE_0799-CP

Validity	Pos.	Code	Description	Q
	1	2900120	Fitting	1
	2	740290	O-ring	1
	3	2901110	Injector	1
	4	800560	O-ring	2
	5	3780450	Spring	1
	6	2901070	Shutter	1
	7	1460430	O-ring	1
	8	1344850	Head	1
	9	1349055	Valve	6
	10	620301	Plug	6
	11	1465720	O-ring	6
	12	1345040	Plug	3
	13	1344790	Fork	6
	14	850850	Screw	4
	15	42579	Valve kit adjustment	1
	16	1349203	Head assembly	1
	17	1342701	Seat	1
	18	600180	O-ring	1
	19	1460151	Piston	1
	20	2021900	Piston	1
	21	1080190	O-ring	1
	22	600180	O-ring	1
	23	1080401	Ring	1
	24	820510	O-ring	1
	25	740290	O-ring	1
	26	1344870	Piston guide	1
	27	1343450	Wobble plate	1
	28	1460190	Spring	1
	29	1980220	Wobble plate	1
	30	2500550	Split pin	1
	31	1344881	Insert	1
	32	1980740	Plug	1
	33	1060120	Nut	1
	34	1345020	Plug	1
	35	3233	Pressure gauge	1
	36	1344890	Plug	1
	37	2560870	O-ring	1
	38	2460180	O-ring	3
	39	770260	O-ring	3
	40	1344750	Piston guide	3
	41	1260440	Water seal	3
	42	1344760	Ring	3
	43	1344050	Pump body	1
	44	1260050	Bushing	1
	45	1040710	O-ring	1
	46	1344060	Cover	1
	47	1260780	Screw	8
	48	1349281	Pump assembly	1
	49	1349000	Plug	1
	50	880111	Key	1
	51	1341070	Bearing	1
	52	480890	Ring	1
	53	111120	Ring	1
	54	1341080	Ring	1
	55	1340060	Connecting-rod	3
	56	1340080	Pin	3
	57	1340070	Piston	3
	58	1260460	Oil seal	3
	59	600180	O-ring	3
	60	1341010	Plate	3
	61	1342740	Piston	3
	62	1341020	Washer	3

Model 1001 RLW

Version:

Serial number:

Code: **24388**

01/07/2016

230 V - 50 Hz | **schuko**

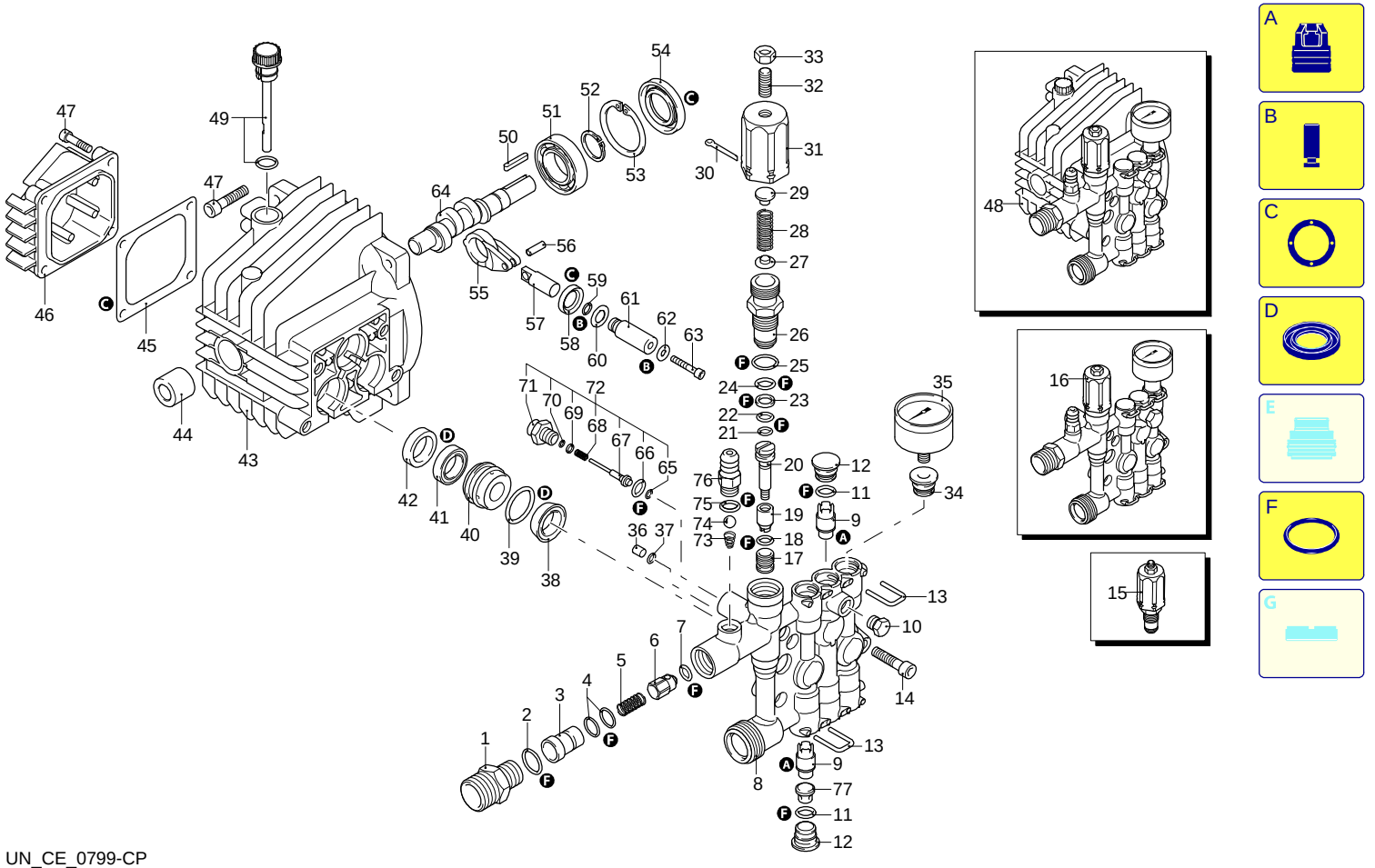

Validity	Pos.	Code	Description	Q
	63	850670	Screw	3
	64	1340170	Shaft	1
	65	1120680	O-ring	1
	66	600180	O-ring	1
	67	2022040	Pin	1
	68	2021630	Spring	1
	69	2021650	Washer	1
	70	1260820	O-ring	1
	71	1344830	Fitting	1
	72	42580	TSS Retrofit kit	1
	73	1560520	Spring	1
	74	1250280	Ball	1
	75	480480	O-ring	1
	76	1982520	Hose tail	1
	77	1344770	Spacer	3
	A	42566	Valve kit	1
	B	2623	Piston kit	1
	C	1876	Oil seal kit	1
	D	42567	Water seal kit	1
	F	42568	Gasket kit	1

UN_CE_0799-CP

Model 1001 RLW

Version:

Serial number:

Code: **24388**

01/07/2016

230 V - 50 Hz | **schuko**

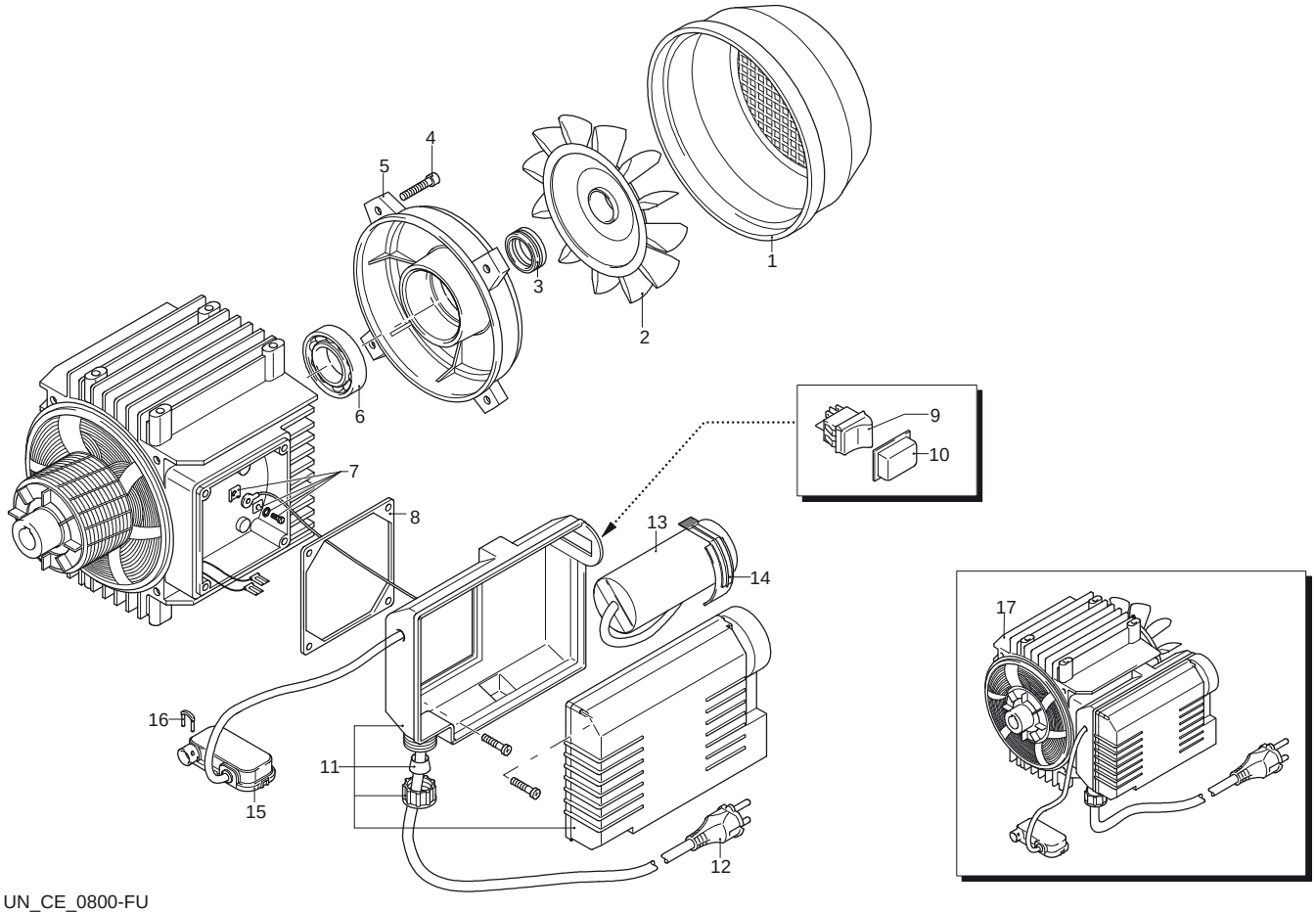

UN_CE_0800-FU

Validity	Pos.	Code	Description	Q
	1	1342040	Fan cowling	1
	2	1260300	Fan	1
	3	1340350	Seal	1
	4	1260760	Screw	1
	5	1340320	Shield	1
	6	1340340	Bearing	1
	7	1269100	Clamp	1
	8	1340780	Gasket	1
	9	1682270	Switch	1
	10	2102600	Guard	1
	11	1342261	Box	1
	12	1760450	Cable	1
	13	1263520	Capacitor	1
	14	1342080	Clamp	1
	15	2029752	TSS box assembly	1
	16	2022201	Fork	1
	17	44480	Motor	1

Model 1001 RLW

Version:

Serial number:

Code: **24388**

01/07/2016

230 V - 50 Hz | **schuko**

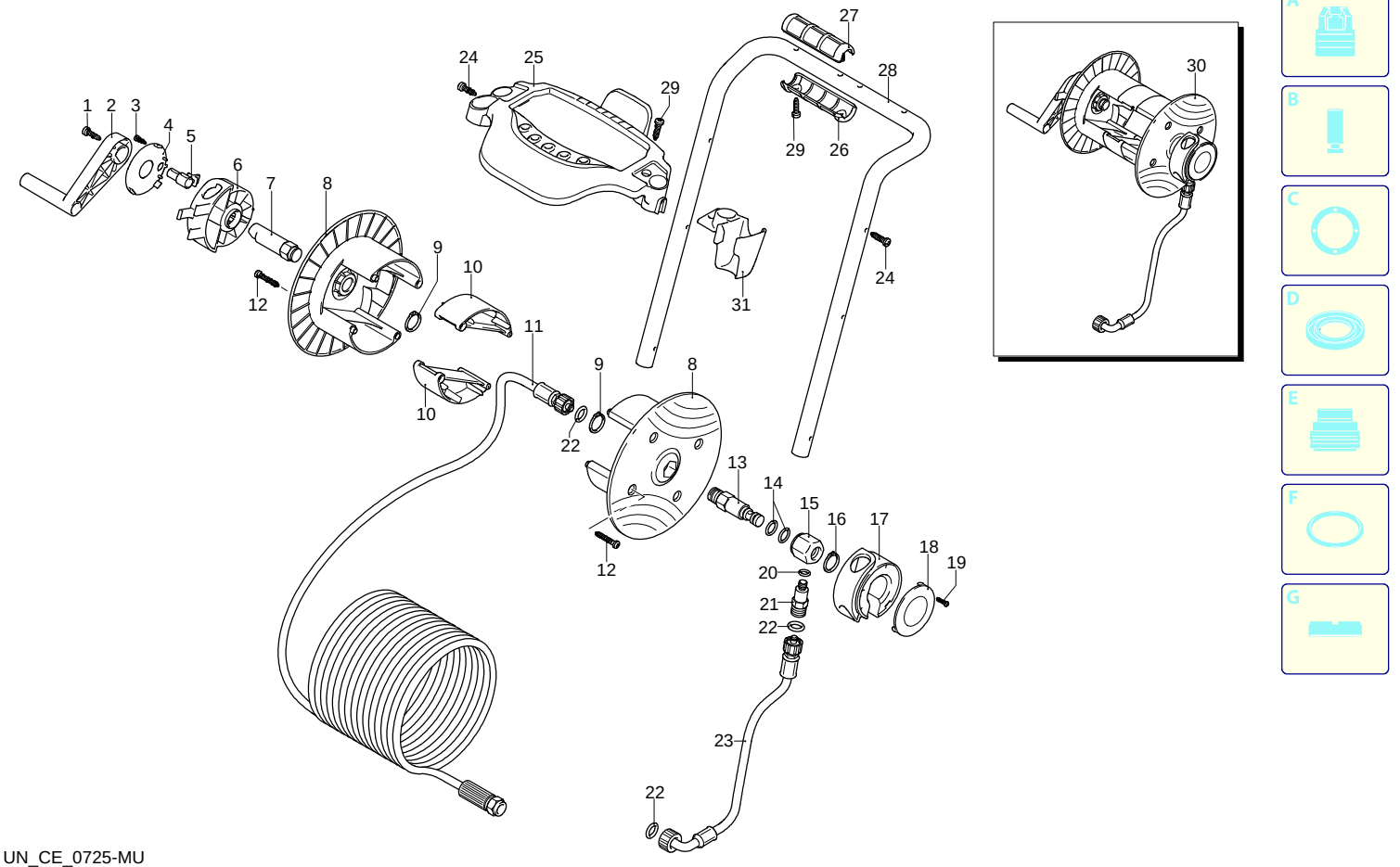

UN_CE_0725-MU

Validity	Pos.	Code	Description	Q
	1	2360360	Screw	1
	2	2360150	Lever	1
	3	2060200	Screw	1
	4	3600210	Cover	1
	5	3600100	Hook	1
	6	3600090	Bracket	1
	7	3600160	Hub pin	1
	8	2360230	Plate	2
	9	380420	Ring	2
	10	3580120	Spacer	2
	11	3600580	High pressure hose	1
	12	2021780	Screw	8
	13	3600240	Hub pin	1
	14	390080	O-ring	2
	15	3600220	Fitting	1
	16	480890	Ring	1
	17	3600080	Bracket	1
	18	3600110	Cover	1
	19	2060200	Screw	1
	20	820510	O-ring	1
	21	3600560	Fitting	1
	22	2000770	O-ring	3
	23	2500351	High pressure hose	1
	24	2060200	Screw	2
	25	3600050	Accessories carrier	1
	26	3580090	Knob	2
	27	3580180	Knob	2
	28	3600130	Frame	1
	29	2100300	Screw	5
	30	42658	Hose reel assembly	1
	31	3600060	Accessories carrier	1

Model 1001 RLW

Version:

Serial number:

Code: **24388**

01/07/2016

230 V - 50 Hz | **schuko**

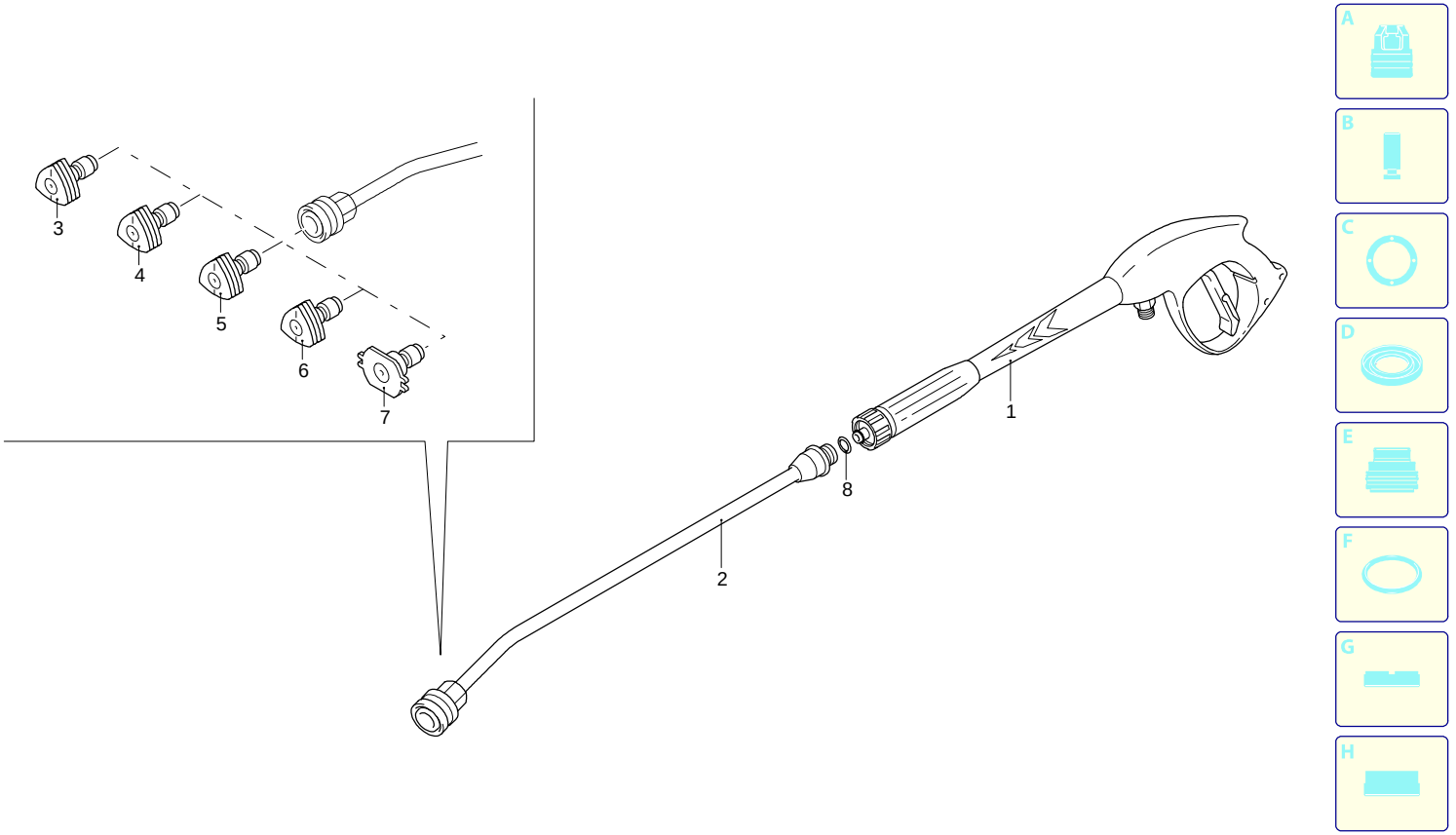

Validity	Pos.	Code	Description	Q
	1	40925	Gun	1
	2	3600650	Lance	1
	3	3600440	Nozzle (0°)	1
	4	3600450	Nozzle (15°)	1
	5	3600460	Nozzle (25°)	1
	6	3600470	Nozzle (40°)	1
	7	3600400	Nozzle (low pressure)	1
	8	3083690	O-ring	1

UN_CE_1450-CP