ACCESSORIES

ACCESSORIES

GENERAL PUMP *A member of the Interpump Group*

GP Pulse Pump

Pulse-Actuated Chemical Pump, With Ball Valve

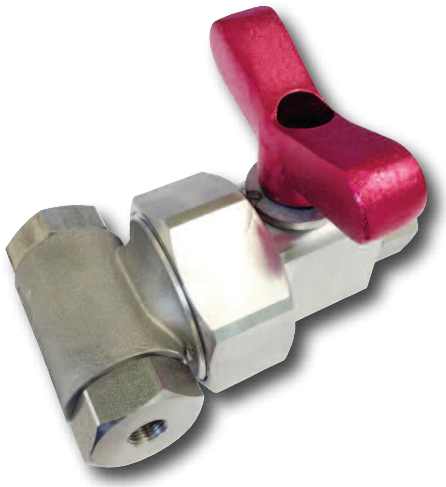

SPECIFICATIONS

Part Number		100149 (RevH)
Maximum Pressure For Pulse Pump		1500 PSI
Max. Pressure w/ Ball Valve Closed		3000 PSI
Ports Sizes:	**Inlet**	1/8”-27 NPT-F
	Outlet	1/8”-27 NPT-F
	Pulse Port	3/8” NPT-F
Dimensions		3” x 3.55” x 4.42”
Weight		3.0 lbs.
Materials		303 Stainless Steel

*Flow will vary according to flow and pressure of the drive pump. For optimum performance inlet pressure to the drive pump should be zero or negative but not to exceed drive pump specifications.

FEATURES

- **303 Stainless Steel body**
- **EPDM diaphragm offers resilience and chemical compatibility**
- **Mounts to one of the drive pump inlet valve ports by using a special valve adapter**
- **Draws cleaning solution with each stroke of the drive pump**
- **Permits cleaning solution application at system pressure up to 1500 PSI**
- **Integrated ball valve allows shut-off when using water pressure up to 3000 PSI**
- **New union style allows replacement of diaphragm without removing plumbing**

PARTS LIST

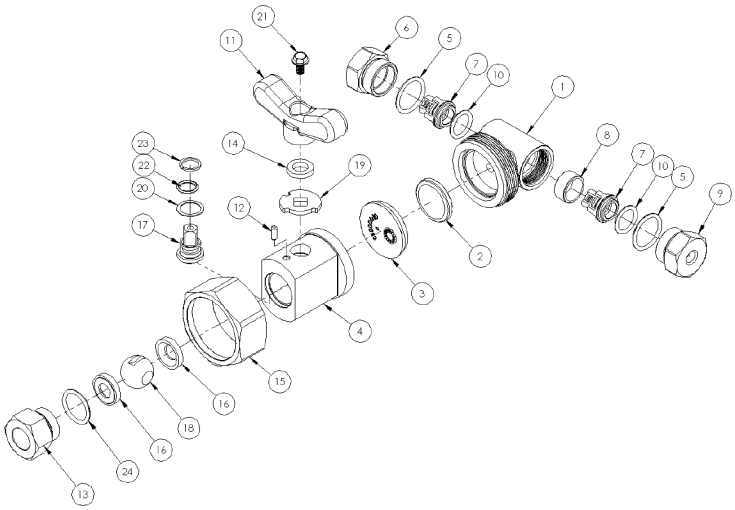

No.	Part Number	Description	Qty.
1.	520381	Body, Pulse Pump	1
2.	660180	Plastic Disc	1
3.	700033	Rubber Diaphragm	1
4.	520270	Pulse Pump, Top, w/ Ball Valve	1
5.	701004	O-ring, .862 x .103	2
6.	520195	Valve Cap, Discharge	1
7.	103162	Assy., Pulse Pump Valve	2
8.	520194	Spacer Ring	1
9.	520196	Valve Cap	1
10.	701114	O-ring, .612 x .103	2
11.	450035	Handle	1
12.	520271	Rotation Stop Pin	1
13.*	520269	Fitting	1
14.	701119	O-ring, SQ 7/16 IDx1/8 CS	1
15.	520338	Nut, Pulse Pump Union	1
16.*	660239	Ball Seal, Pulse Pump	2
17.*	520355	Stem, Ball Valve, Pulse Pump	1
18.*	640009	Ball, Ball Valve, Pulse Pump, SS	1
19.	640010	Rotation Limiting Plate	1
20.*	640011	Friction Disc	1
21.*	200063	HHCS, Flanged, M5x10mm, Steel	1
22.*	701013	O-ring, .426 IDx .070 CS	1
23.*	660067	Back-up Ring	1
24.*	701117V90	O-ring, .799 x .103, Viton	1
*	100190	Ball Valve Repair Kit	

VALVES & ADAPTERS

PUMP SERIES	ADAPTER FITTING	VALVE ASSEMBLY
60 (TC, HTC)	520275	103036
44 (EZ)	520273	103036
63 (TX, HTX)	520273	103036
47 (HTS)	520274	103035
66 (HTF)	520276	103090
Cat 310/3CP/5CP2	520282	N/A
Cat 5CP3/5CP5	520292	N/A
5CP6	520343	N/A

100149 GP Pulse Pump

GENERAL PUMP *A member of the Interpump Group*

DIMENSIONS

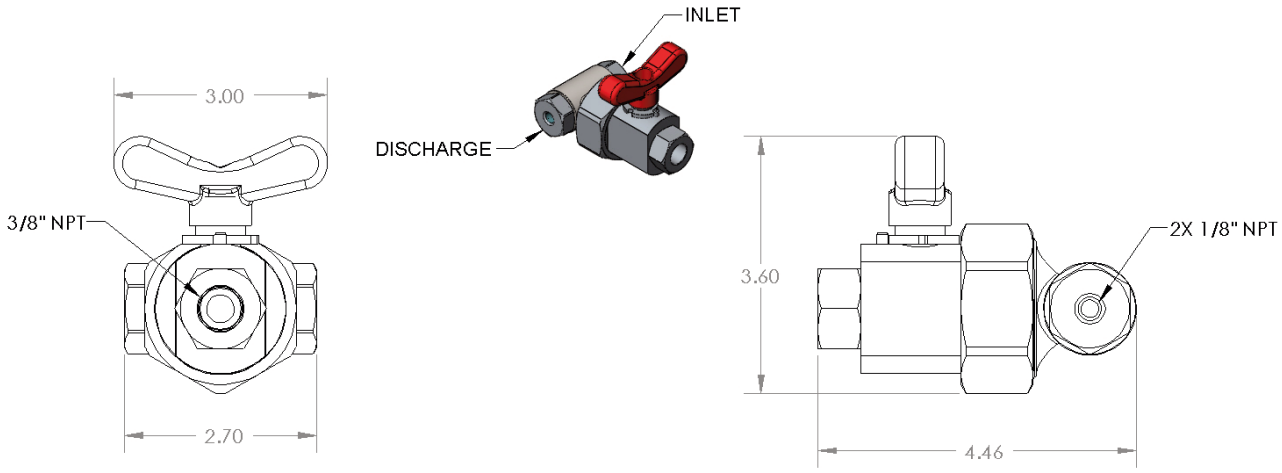

INSTALLATION INSTRUCTIONS

From the drive pump remove one of the standard inlet valve plugs and it's valve assembly and install the special valve assembly with a through hole in the plastic cage and install the special adapter with a 3/8"-18 NPT Male threads that is appropriate for the drive pump and tighten to proper torque. Thread the pulse pump pulse port 3/8"-18 NPT Female onto the special adapter 3/8"-18 NPT Male and tighten until the pulse pump inlet and outlet ports are at desired position. Install pulse pump inlet and outlet according to diagram.

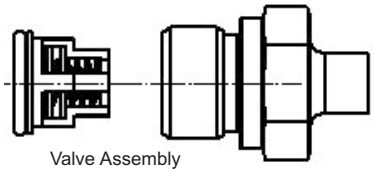
Valve Assembly

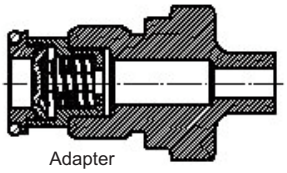
Adapter

CUTAWAYS & OPERATION

SUCTION / INLET

The Pulse Pump attached to one of the inlet valves of a Plunger Pump and as the plunger moves back creating suction it also moves the diaphragm in the Pulse Pump allowing "SOLUTION" to be "DRAWN" through the Pulse Pump inlet valve.

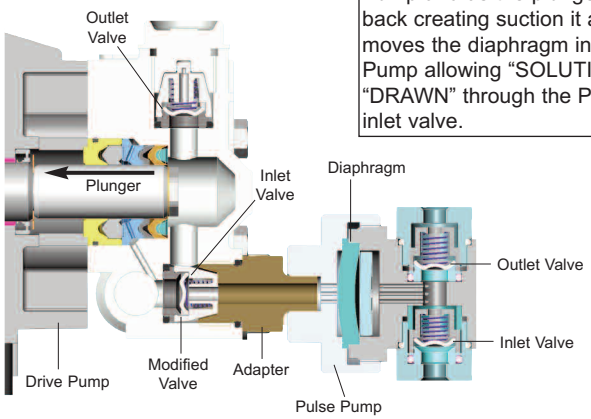

DISCHARGE

When the Pump Plunger moves Forward it also moves the Diaphragm in the Pulse Pump allowing "SOLUTION" to be "PUMPED" through the Pulse Pump outlet valve

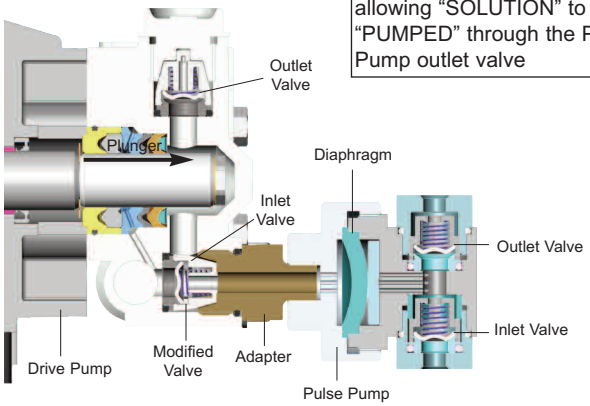

Ref 300681 Rev. C
06-16

GENERAL PUMP

100149 GP Pulse Pump

GENERAL PUMP *A member of the Interpump Group*

CUTAWAYS & OPERATION

SYSTEM DIAGRAM

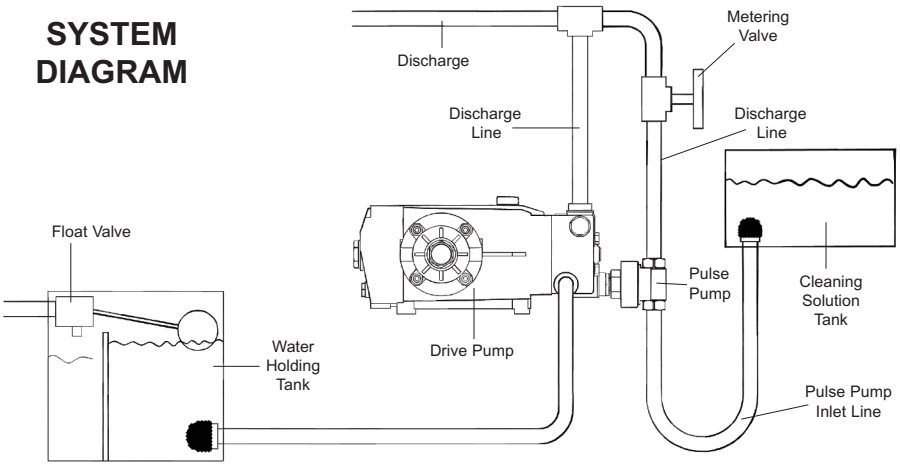

Pulse Pump will not draw cleaning solution with a pressurized inlet to the drive pump. For optimum performance inlet pressure to the drive pump should be zero or negative but not to exceed drive pump specifications.

To adjust the amount of cleaning solution drawn into the system, install a metering valve in the discharge line of the pulse pump.

The pressure limit of 1500 PSI is due to the diaphragm.

START-UP INSTRUCTIONS

With the drive pump open and pulse pump metering valve open (no back pressure), start drive pump. After water starts to flow from system check to be sure the pulse pump is primed and pumping. Then install nozzle and set drive pump pressure to desired discharge pressure. After the unit is operating, adjust metering valve to obtain desired water/cleaning solution ratio.

Mixing ratio varies with output of drive pump.

TROUBLESHOOTING

No cleaning solution supply from Pulse Pump:	• System not primed Airlock between drive pump and pulse pump diaphragm Airlock in pulse pump inlet line • Failure of diaphragm • Foreign material in Pulse Pump inlet and outlet valve
Limited cleaning solution supply from Pulse Pump:	• Restriction between drive pump and pulse pump • Restriction in metering valve • Worn inlet and outlet valves

Ref 300681 Rev. C
06-16

GENERAL PUMP 1174 Northland Drive • Mendota Heights, MN 55120
Phone: 651.686.2199 • Fax: 800.535.1745 • e-mail: sales@gpcompanies.com • www.generalpump.com

GENERAL PUMP