Stainless Steel NKSC SERIES

Solid Shaft Models

24mm Keyed Solid Shaft
1450 RPM

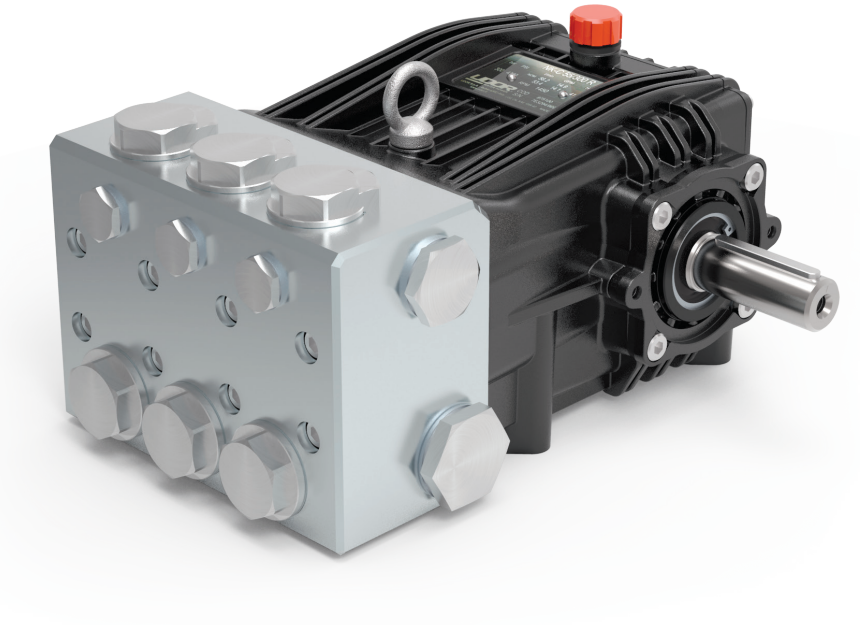

- **316 Stainless Steel Manifolds**
- **316 Stainless Steel Valves**
- **316 Stainless Steel Plunger Rods & Nuts**
- **304 Stainless Steel Exterior Bolts**
- **Solid Ceramic Plungers**
- **1-1/4" BSP-F Inlet.**
- **3/4" or 1" BSP-F Outlet.**
- **57.6 oz. Oil Capacity**
- **Max Fluid Temp, 160°F**

NKSC Series 24mm Keyed Solid Shaft Plunger Pumps

NKSC Series stainless steel plunger pumps include a wide range of models with flow rates from 19.9 to 37.8 GPM and pressures up to 2465 PSI.

These pumps feature stainless steel wetted and exterior components to withstand the harsh environment of salt water applications.

NKSC Series pumps are well suited for de-salination, disinfecting and food/ pharma applications.

	Model	Flow		Pressure		Plunger Dia.	Crankshaft		Power	Seal Kit	Valve Kit	Wt.
		GPM	l/min	PSI	bar		Stroke	Code				
1450 RPM	NKS-C 75/170 R	19.9	75.1	2465	170	28mm	30.0mm	F	32.8 EBHP	6061.12	6061.M6	79.6 lbs
	NKS-C 85/170 R	22.5	85.2	2465	170	28mm	34.0mm	7	37.1 EBHP	6061.12	6061.M6	79.6 lbs
	NKS-C 100/150 R	26.4	100.0	2175	150	30m	34.0mm	7	38.4 EBHP	6072.02	6930.03	79.6 lbs
	NKS-C 145/100 R	37.8	143.0	1450	100	36mm	34.0mm	7	36.7 EBHP	6061.Q1	6930.04	79.6 lbs

All Models available with Gas Engine Gear Reductions. Contact UDOR USA for pricing and availability.

UDOR USA
World Leader in Diaphragm and Plunger Pumps

An UDOR Brand
BOOMINATOR
BOOMLESS SPRAY NOZZLES

6180 140th Avenue NW
Ramsey, MN 55303

Ph: 651-785-0666
Fax: 800-732-2670

www.udorusa.com
www.boominator.com
info@udorusa.com

Scan this QR Code for More Information

Stainless Steel NKS-C 100/150 R

MAX FLOW	26.4 GPM / 99.8 L/MIN
MAX PRESSURE	2175 PSI / 150 BAR
RATED PUMP SPEED	1450 RPM
POWER REQUIREMENT	38.4 HP ELECTRIC
LUBRICATION	57.6 OZ UDOR LUBE

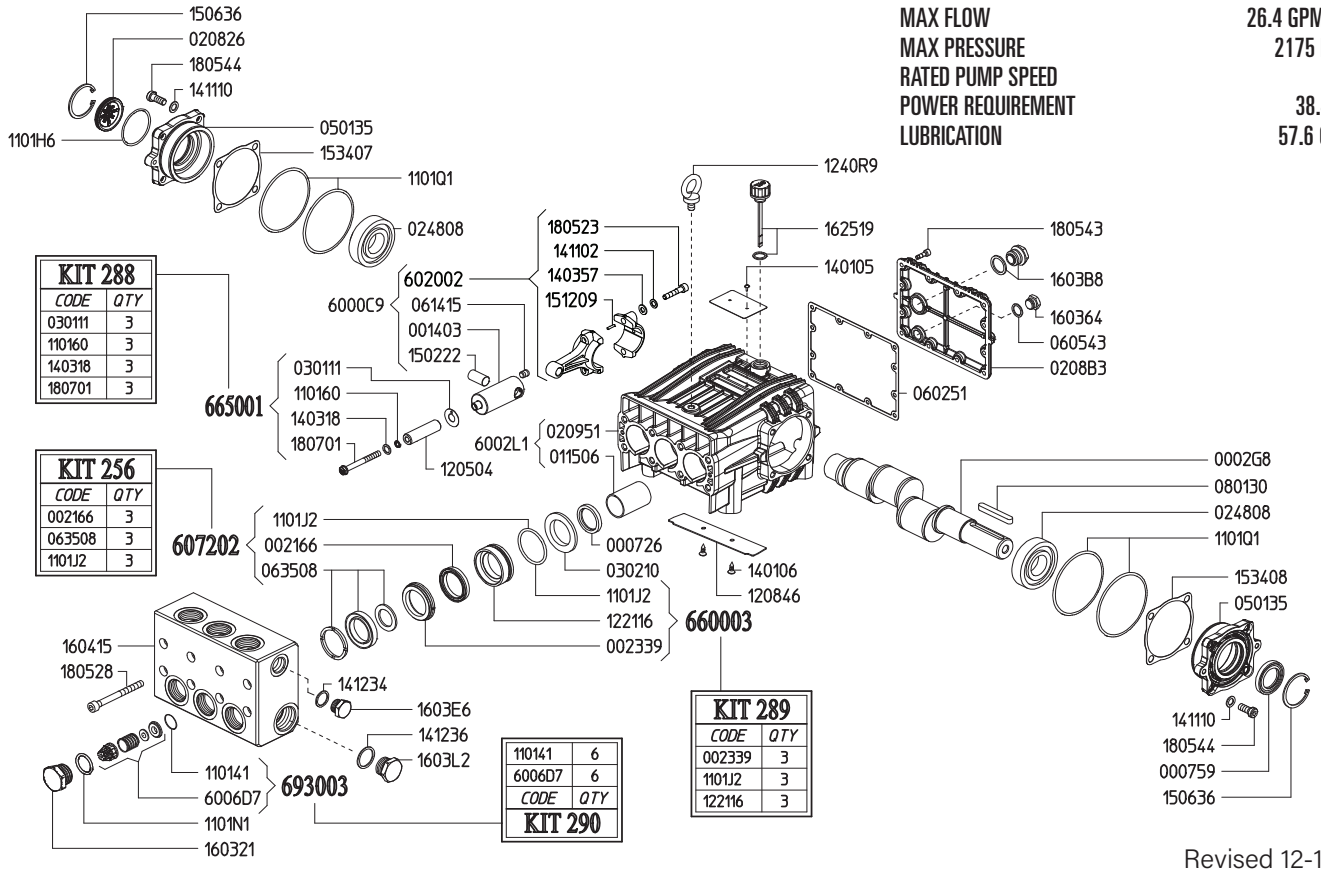

Revised 12-18-2023

Part #	Description	Qty
0002.G8	CRANKSHAFT 30MM	1
0007.26	OIL SEAL D35	3
0007.59	OIL SEAL	1
0014.03	PLUNGER GUIDE	3
0021.66	LOW PRESSURE SEAL D30 [B]	3
0023.39	UPPER RING D30 [D]	3
0115.06	BUSHING D35	3
0208.26	OIL SIGHT GLASS	1
0208.B3	BACK COVER	1
0209.51	CRANKCASE	1
0248.08	BEARING	2
0301.11	SLINGER RING [A]	3
0302.10	SPACER	3
0501.35	BEARING FLANGE	2
0602.51	GASKET – PUMP BODY	1
0605.43	GASKET – D17	1
0614.15	SET SCREW	3
0635.08	HIGH PRESSURE SEAL KIT D30 [B]	3
0801.30	KEY	1
1101.41	O=RING – VALVE [C]	6
1101.60	O-RING – PLUNGER BOLT [A]	3
1101.J2	O-RING - PRESSURE RING [B D]	3
1101.H6	O-RING – OIL SIGHT GLASS	1
1101.N1	O-RING – VALVE PLUG	6
1101.Q1	O-RING – BEARING FLANGE	4
1205.04	CERAMIC PLUNGER D30	3
1208.46	PLATE	1
1221.16	PRESSURE RING D30 [D]	3
1240.R9	LIFTING HOOK M10	1
1401.05	RIVET 3.5X8	2
1401.06	RIVET D4X10	2
1403.14	WASHER – PLUNGER BOLT [A]	3
1403.57	WASHER	6

Part #	Description	Qty
1411.02	SERRATED WASHER	6
1411.10	WASHER	8
1412.34	GASKET	1
1412.36	GASKET	1
1502.22	PIN	3
1506.36	SNAP RING	2
1512.09	PIN D5X20	6
1534.07	GASKET – BEARING FLANGE	1
1534.08	SPACER / GASKET	1
1603.21	VALVE CAP	6
1603.64	PLUG 3/8"	1
1603.B8	OIL SIGHT GLASS W/GASKET	1
1603.E6	PLUG	1
1603.L2	PLUG	1
1604.15	HEAD	1
1625.19	OIL CAP W/GASKET	1
1805.23	ALLEN BOLT	6
1805.28	ALLEN BOLT	8
1805.43	ALLEN BOLT	12
1805.44	ALLEN BOLT	8
1807.01	PLUNGER BOLT [A]	3
6000.C9	COMPLETE CONNECTING ROD ASS'Y	3
6002.L1	CRANKCASE ASSEMBLY	1
6006.D7	VALVE ASSEMBLY W/O O-RING [C]	6
6020.02	CONNECTING ROD	3
6072.02	WATER SEAL KIT (KIT 256)	1
6600.03	BRASS RING KIT D30 (KIT 289)	1
6650.01	PLUNGER BOLT KIT (KIT 288)	1
6930.03	VALVE KIT (KIT 290)	1

[A] Parts in 6650.01 (Kit 288).
[B] Parts in 6072.02 (Kit 256).
[C] Parts in 6930.03 (Kit 290).
[D] Parts in 6061.C1 (Kit 117).

NKS SERIES DIMENSIONS

WEIGHT	79.6 LBS
LUBRICATION	57.6 OZ UDOR LUBE

Dimensional Drawings are Shown in Millimeters. To Convert to Inches, Multiply Dimension x 0.03937

NKS SERIES PUMPS - Under 30 GPM

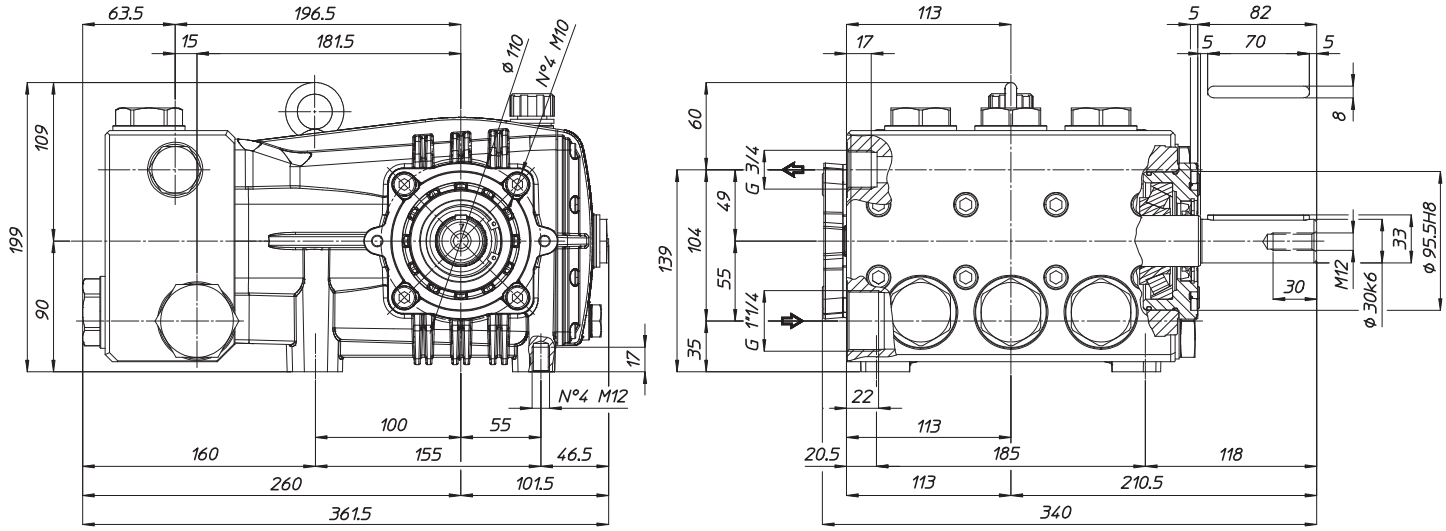

TORQUE SPECS
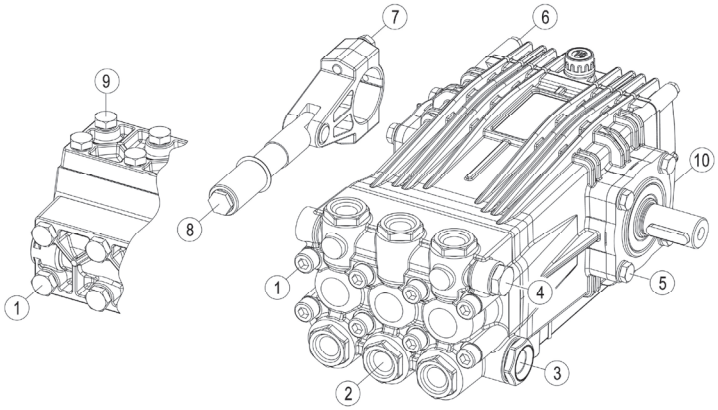
Ref.	Description	Ft./lb.	Nm	Loctite®
1	Head Bolts	37	50	-
2	Valve Caps	88	120	243
3	Inlet Cap	133	180	-
4	Outlet Cap	88	120	243
5	Bearing Flange Bolts	37	50	-
6	Rear Cover Bolts	8	11	-
7	Connecting Rod Bolts	19	25	243
8	Plunger Bolts	22	30	270
9	Valve Cover Bolts	-	-	-
10	Oil Drain Plug	8	11	-