Revised 2-1-2011

PENTA-C 30/500

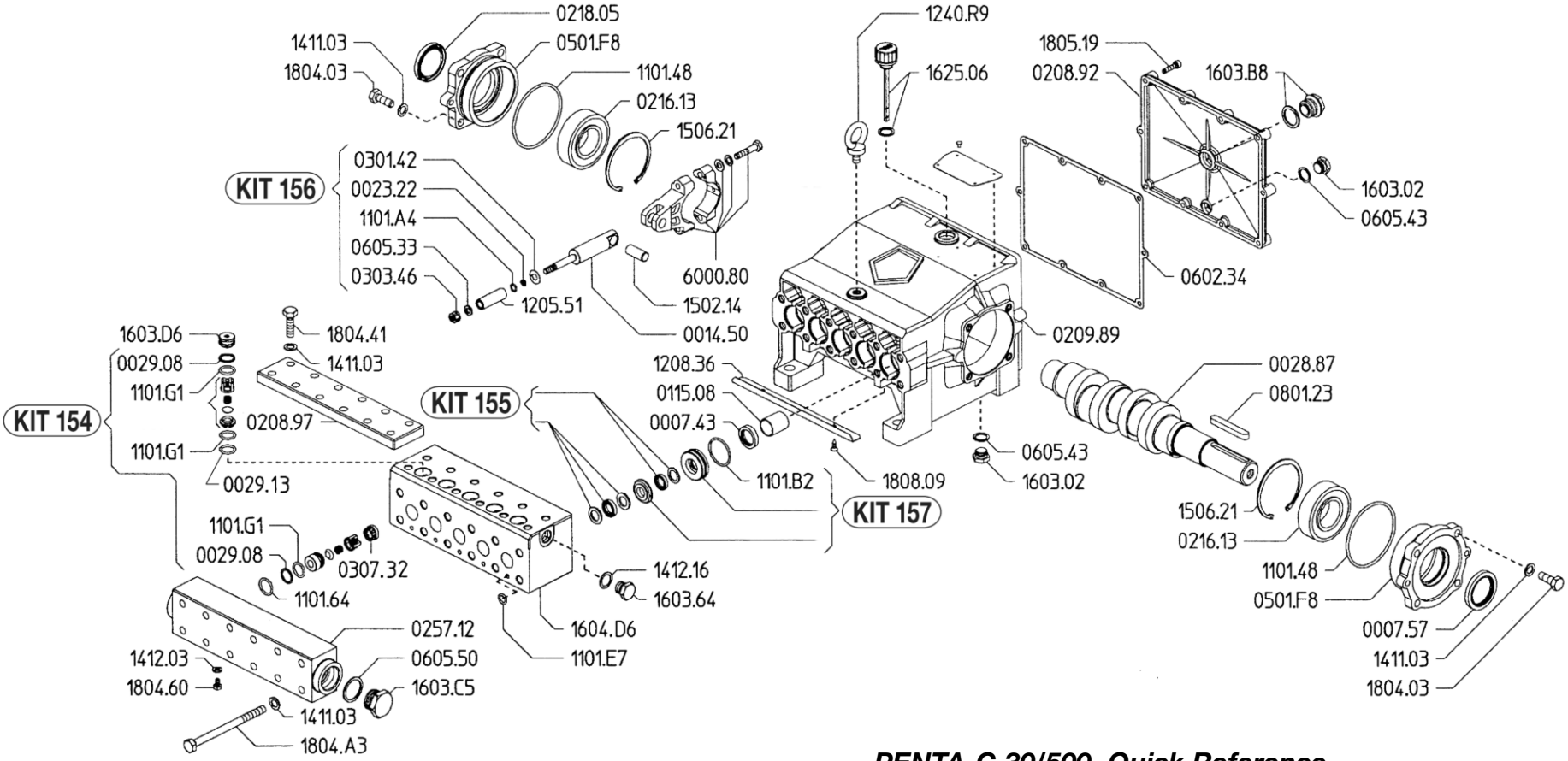

PENTA-C 30/500 Quick Reference

Maximum Flow .....8 GPM	Valve Kit 04-KIT UD-154
Maximum Pressure .....7300 PSI	Seal Kit.....04-KIT UD-155
Rated Pump Speed .....1450 RPM	Brass Kit 04-KIT UD-157
Oil Capacity.....80 oz. UDOR LUBE	Plunger Bolt Kit 04-KIT UD-156
or SAE 30W	Plunger Part # 04-1205.51
Non-Detergent Oil	Plunger Diameter.....16 MM